MASTER
ahead of wind

MASTER AHEAD OF WIND

At Master, we continually push the limits of innovation to provide true sailing joyfulness. Our mission is to provide our customers with high-quality, price-competitiveness,and world-class manufacturing blocks by delivering outstanding value, continuous innovation ans customer's satisfaction.

Master's goal is to become the leading innovative supplier of blocks by suppling the best and the most advanced blocks to our customers. We are driven by passion for sailing; no matter you are a racer or just wan to enjoy sailing, we hope you feel the same when using Master products.

Blocks P.01 - P.50

Hardware P.52 - P.62

Traveler systems P.64 - P.68

Clutch & Tiller Extension P.70 - P.71

Windrider Blocks

LIGHT AND STRONG

WINDRIDER blocks are engineered for competitive sailing. The excellent weather-ability protects blocks from breaking down for ultimate sailing conditions.Available in comprehensive ranges of different rope diameters and configurations. Windrider blocks are beautiful in design, but simple in use.

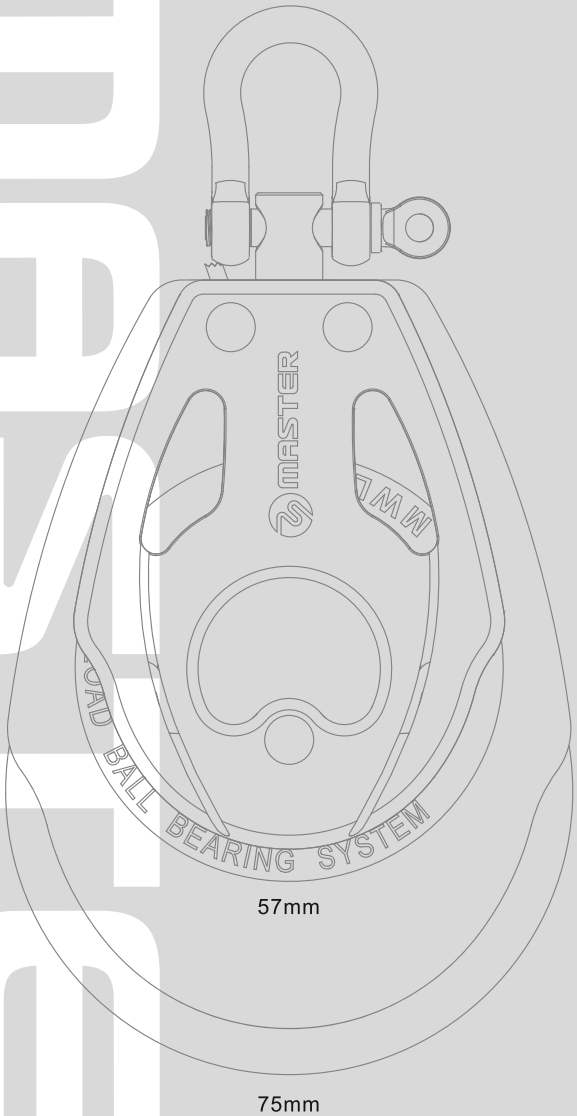

Ultra Lightweight
Cutting edge new composite sets perfect balance between weight and strength

Strong Strength
Super stiff glass reinforced composite is stronger and lighter than class blocks.

Durability
All materials are UV resistant and Anti-Corrosion for maximum protection and long lasting durability.

Twist Lock
Our lock shackle can be easily engaged to position in either of two directions or just lets block free to swivel to keep line from twisting

22mm Windrider Blocks

22mm blocks are designed for sailboards, dinghies, and control lines of all different configurations.

22mm block is made of UV resistant and glass fiber reinforced composites for long-term durability. Sheave runs on UV resistant Derlin® black bearing system for smooth trim and maximum protection.

BB-2201F

BB-2227F

BB-2202F

BB-2210F

BB-2210FE

BB-2211F

BB-2211FE

BB-2203F

BB-2204F

BB-2205F

BB-2206F

BB-2214F

BB-2228F

BB-2213F

BB-2213FE

BB-2212F

BB-2212FE

BB-2209F

Item No.	Description	Sheave in	Sheave mm	Length in	Length mm	Weight oz	Weight g	Max line size in	Max line size mm	Safe working load lb	Safe working load kg	Breaking load lb	Breaking load kg
BB-2201F	Single	7/8	22	11/2	38	0.28	8	1/4	6	220	100	858	390
BB-2227F	Single/Shackle	7/8	22	21/9	53	0.65	18.5	1/4	6	220	100	858	390
BB-2202F	Single/Becket	7/8	22	16/7	47	0.35	10	1/4	6	220	100	858	390
BB-2210F	Single/Cam	7/8	22	11/2	38	1.66	47	1/4	6	176	80	356	160
BB-2210FE	Single/Cam/Angle	7/8	22	11/2	38	1.83	52	1/4	6	176	80	356	160
BB-2211F	Single/Cam/Becket	7/8	22	16/7	47	1.73	49	1/4	6	176	80	356	160
BB-2211FE	Single/Cam/Angle/Becket	7/8	22	16/7	47	1.90	54	1/4	6	176	80	356	160
BB-2203F	Double	7/8	22	2	51	0.97	27.5	1/4	6		**200**		**780**
BB-2204F	Double/Becket	7/8	22	24/9	62	1.33	33.7	1/4	6		**200**		**900**
BB-2205F	Triple	7/8	22	2	51	1.46	41.5	1/4	6		**500**		**780**
BB-2206F	Triple/Becket	7/8	22	24/9	62	1.50	42.5	1/4	6		**500**		**900**
BB-2214F	Connected	7/8	22	4	102	0.63	18	1/4	6	220	100	858	390
BB-2228F	Single/Shackle/Becket	7/8	22	21/2	64	0.69	19.5	1/4	6	220	100	858	390
BB-2213F	Triple/Cam/Becket	7/8	22	24/9	62	2.86	81	1/4	6	176	80	356	160
BB-2213FE	Triple/Cam/Angle/Becket	7/8	22	24/9	62	3.03	86	1/4	6	176	80	356	160
BB-2212F	Triple/Cam	7/8	22	2	51	2.82	80	1/4	6	176	80	356	160
BB-2212FE	Triple/Cam/Angle	7/8	22	2	51	3.00	85	1/4	6	176	80	356	160
BB-2209F	Cheek	7/8	22	12/3	42	0.32	9.2	1/4	6	220	100	858	390

29mm Windrider Blocks

29mm blocks are ideal for mainsheet blocks on small dinghies or control lines for different configurations.

29mm block is made of UV resistant and glass fiber reinforced composites for long-term durability. Sheave runs on UV resistant Derlin® black bearing system for smooth trim and maximum protection. Triple with cleat can be configurated to high-load system of 5:1 or 6:1.

Swivel exits are extremely strong with cleats for halyard control. Cleats have options in composite or Aluminum.

BB-0201F

BB-0202F

BB-0203F

BB-0204F

BB-0205F

BB-0206F

BB-0212F

BB-0212FE

PE-0201F

PE-0201FE

BB-0213F

BB-0213FE

BB-0215F

BB-0217F

BB-0209F

BB-0216F
Rope not included

BB-0223F

BB-0214F

Item No.	Description	Sheave in	Sheave mm	Length in	Length mm	Weight oz	Weight g	Max line size in	Max line size mm	Safe working load lb	Safe working load kg	Breaking load lb	Breaking load kg
BB-0201F	Single/Swivel	1 1/8	29	2 3/5	66	0.88	25	5/18	8	352	160	1102	500
BB-0202F	Single/Swivel/Becket	1 1/8	29	3	78	0.95	27	5/18	8	352	160	1102	500
BB-0203F	Double/Swivel	1 1/8	29	2 3/5	66	1.52	43	5/18	8		320		800
BB-0204F	Double/Swivel/Becket	1 1/8	29	3	78	1.62	46	5/18	8		320		800
BB-0205F	Triple/Swivel	1 1/8	29	2 3/5	66	2.05	58	5/18	8		480		960
BB-0206F	Triple/Swivel/Becket	1 1/8	29	3	78	2.12	60	5/18	8		480		960
BB-0212F	Triple/Cam	1 1/8	29	2 5/7	69	3.18	90	5/18	8	176	80	352	160
BB-0212FE	Triple/Cam/Angle	1 1/8	29	2 5/7	69	3.42	97	5/18	8	176	80	352	160
BB-0213F	Triple/Cam/Becket	1 1/8	29	3	78	3.25	92	5/18	8	176	80	352	160
BB-0213FE	Triple/Cam/Angle/Becket	1 1/8	29	3	78	3.46	98	5/18	8	176	80	352	160
BB-0215F	Single	1 1/8	29	2	53	0.6	17	5/18	8	352	160	1102	500
BB-0217F	Stand-up	1 1/8	29	2	53	0.92	26	5/18	8	352	160	1102	500
BB-0209F	Cheek	1 1/8	29	2 1/6	55	0.56	16	5/18	8	352	160	1102	500
BB-0216F	Lashing	1 1/8	29	1 3/4	44	0.53	15	5/18	8	352	160	1102	500
BB-0223F	90° Fixed head	1 1/8	29	2	53	0.81	23	5/18	8	352	160	1102	500
BB-0214F	Connected	1 1/8	29	3 1/2	90	1.24	35	5/18	8	352	160	1102	500
PE-0201F	Swivel exit/Cam	1 1/8	29	3 3/4	70	4.77	136	5/18	8	352	160	1102	500
PE-0201FE	Swivel exit/Cam/Angle	1 1/8	29	3 3/4	70	6.44	183	5/18	8	176	80	352	160

Do not use Master products to human suspension !

BB-0225F

BB-0207F

BB-0208F

BB-0224F

(See page 46)

Lashing can be used as 4:1 system mainsheet blocks for dinghies.All spliced and tied together ready to use.

PE-0202F

PE-0202FE

*1 becket load should not exceed 30% of block load.
*2 Safe working and breaking load for Cam models based on Cam strength.

Item No.	Description	Sheave in	Sheave mm	Length in	Length mm	Weight oz	Weight g	Max line size in	Max line size mm	Safe working load lb	Safe working load kg	Breaking load lb	Breaking load kg
BB-0225F	Crew and Ring	7/8	22	25/6	72	1.59	45	1/4	6	220	100	858	390
BB-0207F	Double	7/8	22	21/3	60	1.38	39	1/4	6		480		960
BB-0208F	Double/Becket	7/8	22	25/6	72	1.69	48	1/4	6		480		960
BB-0224F	Triple	7/8	22	21/3	60	2.12	60	1/4	6		480		960
PE-0202F	Swivel exit/AL Cam	11/8	29	23/4	70	2.82	80	1/4	6	176	80	352	160
PE-0202FE	Swivel exit/AL Cam/Angle	11/8	29	23/4	70	3.09	87	1/4	6	176	80	352	160

40mm Winderider Blocks

40mm blocks are ideal for mainsheet or jib blocks on small dinghies or control lines for different configurations.

40mm block is made of UV resistant and glass fiber reinforced composites for long-term durability. Sheave runs on UV resistant Derlin® black bearing system for smooth trim and maximum protection.

Swivel exits are extremely strong with cleats for halyard control. Cleats can be purchased in composite or Aluminum.

BB-0401F

BB-0402F

BB-0409F

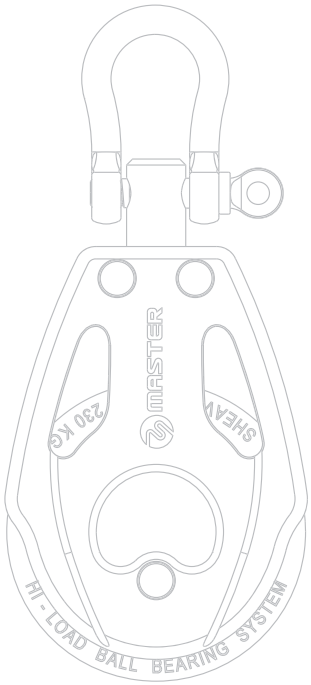

Actual size

BB-0410F

BB-0410FE

BB-0411F

BB-0411FE

BB-0414F

BB-0415F

BB-0417F

BB-0423F

BB-0423FR

*1 becket load should not exceed 30% of block load.
*2 Safe working and breaking load for Cam models based on Cam strength.

Item No.	Description	Sheave in	Sheave mm	Length in	Length mm	Weight oz	Weight g	Max line size in	Max line size mm	Safe working load lb	Safe working load kg	Breaking load lb	Breaking load kg
BB-0401F	Single/Swivel	19/16	40	31/2	90	1.62	46	3/8	10	506	230	1760	800
BB-0402F	Single/Swivel/Becket	19/16	40	41/5	107	1.73	49	3/8	10	506	230	1760	800
BB-0409F	Cheek	19/16	40	24/5	71	1.09	31	3/8	10	506	230	1760	800
BB-0410F	Single/Swivel/Cam	19/16	40	31/2	90	3.35	95	1/4	6	176	80	352	160
BB-0410FE	Single/Swivel/Cam/Angle	19/16	40	31/2	90	3.71	105	1/4	6	176	80	352	160
BB-0411F	Single/Swivel/Cam/Becket	19/16	40	41/5	107	3.46	98	1/4	6	176	80	352	160
BB-0411FE	Single/Swivel/Cam/Angle/Becket	19/16	40	41/5	107	3.81	108	1/4	6	176	80	352	160
BB-0414F	Connected	19/16	40	45/7	120	2.36	67	1/4	6	506	230	1760	800
BB-0415F	Single	19/16	40	25/9	65	1.20	34	3/8	10	506	230	1760	800
BB-0417F	Stand-up	19/16	40	22/3	67	1.52	43	3/8	10	506	230	1760	800
BB-0423F	90˚ Fixed head shackle	19/16	40	3	76	1.55	44	3/8	10	506	230	1760	800
BB-0423FR	Removable Strap Shackle	19/16	40	3	76	1.55	44	3/8	10	506	230	1760	800

BB-0403F

BB-0404F

BB-0405F

BB-0406F

Strong and lightweight reinforced Nylon composite with glass fibers for strength and durability.

BB-0407F

BB-0408F

BB-0412F

BB-0412FE

The Single can be used as becket block.

BB-0413F

BB-0413FE

PE-0401F

PE-0401FE

BB-0416F
Rope not included

*1 becket load should not exceed 30% of block load.
*2 Safe working and breaking load for Cam models based on Cam strength.

Item No.	Description	Sheave in	Sheave mm	Length in	Length mm	Weight oz	Weight g	Max line size in	Max line size mm	Safe working load lb	Safe working load kg	Breaking load lb	Breaking load kg
BB-0403F	Double/Swivel	19/16	40	31/2	90	2.96	84	3/8	10		460		1176
BB-0404F	Double/Swivel/Becket	19/16	40	41/5	107	3.30	86	3/8	10		460		1176
BB-0405F	Triple/Swivel	19/16	40	31/2	90	4.2	119	3/8	10		690		1507
BB-0406F	Triple/Swivel/Becket	19/16	40	41/5	107	4.3	122	3/8	10		690		1507
BB-0407F	Double	19/16	40	3	76	2.54	72	3/8	10		690		1507
BB-0408F	Double/Becket	19/16	40	32/3	93	2.68	76	3/8	10		460		1176
BB-0412F	Triple/Swivel/Cam	19/16	40	31/2	90	5.82	165	1/4	6		690		1507
BB-0412FE	Triple/Swivel/Cam/Angle	19/16	40	31/2	90	6.07	172	1/4	6		690		1507
BB-0413F	Triple/Swivel/Cam/Becket	19/16	40	41/5	107	5.93	168	3/8	10		690		1507
BB-0413FE	Triple/Swivel/Cam/Becket/Angle	19/16	40	41/5	107	6.18	175	3/8	10		690		1507
PE-0401F	Swivel exit/Cam	19/16	40	41/5	107	7.97	226	1/4	6	176	80	440	200
PE-0401FE	Swivel exit/Cam/Angle	19/16	40	42/3	118	9.12	259	1/4	6	176	80	440	200
BB-0416F	Lashing	19/16	40	31/2	90	0.99	28	3/8	10	506	230	1760	800

57mm Windrider Blocks

57mm blocks are ideal for mainsheet or jib blocks on dinghies, catamarans, sportboats and small keelboats, Halyard, vang and backstay applications or control lines for different configurations.

57mm block is made of UV resistant and lightweight glass fiber reinforced composites for long-term durability. Sheave runs on UV resistant Derlin® black bearing system for smooth trim and maximum protection. Shackles are Grade 316 stainless steel.

Swivel exits are extremely strong with cleats for halyard control. Cleats can be purchased in composite or Aluminum.

BB-0501F

BB-0502F

An exclusive lock can be easily engaged to position shackle in either of two directions or just let block free to swivel.

The self-lubricant Teflon® and Carbon fiber Derlin® ball bearing provides smooth rotation and excellent UV- resistance.

BB-0516F
Rope not included

BB-0509F

BB-0503F

BB-0504F

BB-0518F

*1 becket load should not exceed 30% of block load.
*2 Safe working and breaking load for Cam models based on Cam strength.

Item No.	Description	Sheave in	Sheave mm	Length in	Length mm	Weight oz	Weight g	Max line size in	Max line size mm	Safe working load lb	Safe working load kg	Breaking load lb	Breaking load kg
BB-0501F	Single/Swivel	21/4	57	44/5	122	3.14	89	3/8	10	814	370	2640	1200
BB-0502F	Single/Swivel/Becket	21/4	57	52/3	144	3.49	99	3/8	10	814	370	2640	1200
BB-0516F	Lashing	21/4	57	3	75	2.12	60	3/8	10	814	370	2640	1200
BB-0509F	Cheek	21/4	57	32/3	93	2.47	70	3/8	10	814	370	2640	1200
BB-0503F	Double	21/4	57	44/5	122	6.1	173	3/8	10		**740**		**1690**
BB-0504F	Double/Becket	21/4	57	52/3	144	6.35	180	3/8	10		**740**		**1690**
BB-0518F	Quad/Swivel	21/4	57	44/5	122	11.64	330	3/8	10	814	370	2640	1200

Do not use Master products to human suspension !

BB-0505F

BB-0506F

BB-0510F

BB-0510FE

BB-0511F

BB-0512F

BB-0512FE

BB-0513F

BB-0513FE

BB-0511FE

Keep on sailing where others have to stop

*1 becket load should not exceed 30% of block load.
*2 Safe working and breaking load for Cam models based on Cam strength.

Item No.	Description	Sheave in	Sheave mm	Length in	Length mm	Weight oz	Weight g	Max line size in	Max line size mm	Safe working load lb	Safe working load kg	Breaking load lb	Breaking load kg
BB-0505F	Triple/Swivel	21/4	57	44/5	122	8.82	250	3/8	10		1110		2560
BB-0506F	Triple/Swivel/Becket	21/4	57	52/3	144	9.17	260	3/8	10		1110		2560
BB-0510F	Single/Swivel/Cam	21/4	57	44/7	116	6.92	196	3/8	10		370		1200
BB-0510FE	Single/Swivel/Cam/Angle	21/4	57	44/7	116	7.27	206	3/8	10		370		1200
BB-0512F	Triple/Swivel/Cam	21/4	57	44/5	122	12.28	348	3/8	10		1110		2560
BB-0512FE	Triple/Swivel/Cam/Angle	21/4	57	44/5	122	12.74	361	3/8	10		1110		2560
BB-0513F	Triple/Swivel/Cam/Becket	21/4	57	52/3	144	12.88	365	3/8	10		1110		2560
BB-0513FE	Triple/Swivel/Cam/Angle/Becket	21/4	57	52/3	144	13.34	378	3/8	10		1110		2560
BB-0511F	Single/Swivel/Cam/Becket	21/4	57	52/3	144	7.16	203	3/8	10		370		1200
BB-0511FE	Single/Swivel/Cam/Angle/Becket	21/4	57	52/3	144	7.53	213	3/8	10		370		1200

75mm Windrider Blocks

75mm blocks are ideal for mainsheet system or spinnaker sheets on racing boats or control lines for different configurations on large yachts.

75mm block is made of UV resistant and lightweight glass fiber reinforced composites for long-term durability. Sheave runs on UV resistant Derlin® Carbon black bearing system for smooth trim and maximum protection. Shackles are Grade 316 stainless steel.

BB-0701F

BB-0702F

BB-0703F

BB-0704F

BB-0705F

BB-0706F

BB-0712F

BB-0712FE

BB-0713F

BB-0713FE

BB-0711F

BB-0711FE

BB-0718F

BB-0710F

BB-0710FE

The cam cleat is mounted on adjustable arm which can be fixed in different angles.

*1 becket load should not exceed 30% of block load.
*2 Safe working and breaking load for Cam models based on Cam strength.

Item No.	Description	Sheave in	Sheave mm	Length in	Length mm	Weight oz	Weight g	Max line size in	Max line size mm	Safe working load lb	Safe working load kg	Breaking load lb	Breaking load kg
BB-0701F	Single/Swivel	215/16	75	55/9	141	6.70	190	9/16	14	1232	560	3740	1700
BB-0702F	Single/Swivel/Becket	215/16	75	63/5	168	7.47	212	9/16	14	1232	560	3740	1700
BB-0703F	Double/Swivel	215/16	75	55/6	148	12.24	347	9/16	14		**1120**		**2833**
BB-0704F	Double/Swivel/Becket	215/16	75	66/7	174	12.91	366	9/16	14		**1120**		**2833**
BB-0705F	Triple/Swivel	215/16	75	55/6	148	17.46	495	9/16	14		**1680**		**4721**
BB-0706F	Triple/Swivel/Becket	215/16	75	66/7	174	18.16	515	9/16	14		**1680**		**4721**
BB-0712F	Triple/Swivel/Cam	215/16	75	55/6	148	23.01	652	1/2	12		**1680**		**4721**
BB-0712FE	Triple/Swivel/Cam/Angle	215/16	75	55/6	148	23.36	662	1/2	12		**1680**		**4721**
BB-0713F	Triple/Swivel/Cam/Becket	215/16	75	66/7	174	23.70	672	1/2	12		**1680**		**4721**
BB-0713FE	Triple/Swivel/Cam/Angle/Becket	215/16	75	66/7	174	24.06	682	1/2	12		**1680**		**4721**
BB-0711F	Single/Swivel/Cam/Becket	215/16	75	63/5	168	12.24	347	1/2	12	1232	560	3740	1700
BB-0711FE	Single/Swivel/Cam/Angle/Becket	215/16	75	63/5	168	12.59	357	1/2	12	1232	560	3740	1700
BB-0718F	Quad/Swivel	215/16	75	61/4	159	22.94	650	1/2	12	1232	560	3740	1700
BB-0710F	Single/Swivel/Cam	215/16	75	55/6	148	11.50	326	1/2	12	1232	560	3740	1700
BB-0710FE	Single/Swivel/Cam/Angle	215/16	75	55/6	148	11.85	336	1/2	12	1232	560	3740	1700

Fiddle blocks

The Windrider fiddle blocks feature Derlin® ball bearing for static high load. The 40mm Fiddle blocks can be purchased for 3:1 and 4:1 systems.

The 57mm Fiddle blocks feature lock up shackle. The patented design can be easily engaged to position in either of two directions or just let block free to swivel to keep line from twisting.

BB-0419F
BB-0519F

BB-0420F
BB-0520F

BB-0421FE
BB-0521FE

BB-0421F
BB-0521F

BB-0422F
BB-0522F

BB-0422FE
BB-0522FE

Item No.	Description	Sheave in	Sheave mm	Length in	Length mm	Weight oz	Weight g	Max line size in	Max line size mm	Safe working load lb	Safe working load kg	Breaking load lb	Breaking load kg
BB-0419F	Single/Swivel/Fiddle	19/16	40	45/7	120	2.08	59	5/16	8	506	230	1760	800
BB-0519F	Single/Swivel/Fiddle	21/4	57	62/9	158	8.76	135	3/8	10	814	370	2640	1200
BB-0420F	Single/Swivel/Fiddle/Becket	19/16	40	51/3	135	2.19	62	5/16	8	506	230	1760	800
BB-0520F	Single/Swivel/Fiddle/Becket	21/4	57	7	179	5.12	145	3/8	10	814	370	2640	1200
BB-0421F	Single/Swivel/Fiddle/Cam	19/16	40	45/7	120	3.81	108	1/4	6	506	230	1760	800
BB-0521F	Single/Swivel/Fiddle/Cam	21/4	57	62/9	158	7.76	220	3/8	10	814	370	2640	1200
BB-0421FE	Single/Swivel/Fiddle/Cam/Angle	19/16	40	45/7	120	4.16	118	1/4	6	814	370	2640	1200
BB-0521FE	Single/Swivel/Fiddle/Cam/Angle	21/4	57	62/9	158	8.12	230	3/8	10	814	370	2640	1200
BB-0422F	Single/Swivel/Fiddle/Becket/Cam	19/16	40	51/3	135	3.95	112	1/4	6	506	230	1760	800
BB-0522F	Single/Swivel/Fiddle/Becket/Cam	21/4	57	7	179	8.12	230	3/8	10	814	370	2640	1200
BB-0422FE	Single/Swivel/Fiddle/Becket/Cam/Angle	19/16	40	51/3	135	3.95	112	1/4	6	506	230	1760	800
BB-0522FE	Single/Swivel/Fiddle/Becket/Cam/Angle	21/4	57	7	179	8.47	240	3/8	10	814	370	2640	1200

Deluxe Blocks

LIGHT AND STRONG

Deluxe blocks are beautifully hybrid with composite and Stainless steel to provide lightweight, compact and durability. Deluxe Blocks are available in a wide range of configurations to meet boat systems and are ideal for all applications.

The Deluxe block features 316 Stainless steel sheaves for strength and anti-corrosion for wire.

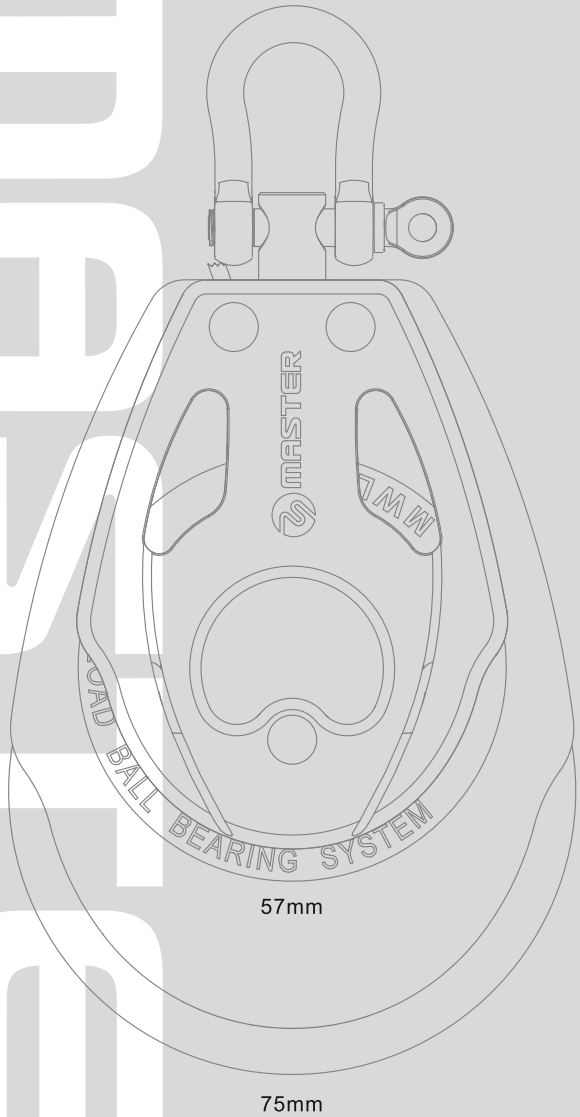

Hybrid Material

Cutting edge new composite and 316L Stainless steel set perfect balance between weight and strength

Two Race Ball Bearing

Two races free running Derlin® ball bearing provide excellent roration and less friction

Durability

All materials are UV resistant and Anti-Corrosion for maximum protection and long lasting durability.

Twist Lock

Our lock shackle can be easily engaged to position in either of two directions or just let block free to swivel to keep line from twisting without hassle.

Deluxe 29mm

29mm blocks are ideal for almost all control line applications. They are hybrid with composites and 316L Stainless steel. Derlin® sheave is running with two races of Derlin® carbon black ball bearing for UV protection and smooth rotation.

Wire blocks feature 316L Stainless steel sheave to carry high loads for durability and corrosion resistance.

Master Deluxe blocks have very high working loads. Sideplates of super strength composite work with 316L stainless steel for extremely high loads and durability.

SPB-2901F
SPS-2901F

SPB-2902F
SPS-2902F

SPB-2903F
SPS-2903F

SPB-2904F
SPS-2904F

SPB-2905F
SPS-2905F

SPB-2906F
SPS-2906F

SPB-2913F
SPS-2913F

SPB-2911F
SPS-2911F

SPB-2912F
SPS-2912F

*1 becket load should not exceed 30% of block load.
*2 Safe working and breaking load for Cam models based on Cam strength.

Item No.	Description	Sheave in	Sheave mm	Length in	Length mm	Weight oz	Weight g	Max line/wire size in	Max line/wire size mm	Safe working load lb	Safe working load kg	Breaking load lb	Breaking load kg
SPB-2901F	Single/Swivel	1 1/8	29	25	63	1.05	30	5/16	8	396	180	1980	900
SPB-2902F	Single/Swivel/Becket	1 1/8	29	33	83	1.44	41	5/16	8	396	180	1980	900
SPB-2903F	Double	1 1/8	29	27 1/2	69	2.22	63	5/16	8		220		910
SPB-2904F	Double/Becket	1 1/8	29	35 1/2	90	2.43	69	5/16	8		220		910
SPB-2905F	Triple	1 1/8	29	29 3/8	74	3.31	94	5/16	8		280		910
SPB-2906F	Triple/Becket	1 1/8	29	37 1/5	94	3.56	101	5/16	8		280		910
SPB-2913F	Triple/Cam/Becket	1 1/8	29	37 1/5	94	1.63	46	1/4	6		280		910
SPB-2911F	Single	1 1/8	29	20 1/3	51	0.79	23	5/16	8	396	180	1980	900
SPB-2912F	Single/Becket	1 1/8	29	28 1/4	71	1.01	29	5/16	8	396	180	1980	900
• **SPS-2901F**	Single/Swivel/Becket	1 1/8	29	25	63	1.58	45	5/16	8	396	180	1980	900
• **SPS-2902F**	Double/Swivel	1 1/8	29	33	83	1.97	56	5/16	8	396	180	1980	900
• **SPS-2903F**	Double	1 1/8	29	27 1/2	69	3.20	93	5/16	8	396	180	1980	900
• **SPS-2904F**	Double/Becket	1 1/8	29	25 1/2	90	3.49	99	5/16	8	396	180	1980	900
• **SPS-2905F**	Triple	1 1/8	29	29 3/8	74	4.90	139	5/16	8	396	180	1980	900
• **SPS-2906F**	Triple/Becket	1 1/8	29	37 1/5	94	5.15	146	5/16	8	396	180	1980	900
• **SPS-2913F**	Triple/Cam/Becket	1 1/8	29	37 1/5	94	3.22	91	1/4	6	176	80	352	160
• **SPS-2911F**	Single	1 1/8	29	20 1/3	51	1.32	38	5/16	8	396	180	1980	900
• **SPS-2912F**	Single/Becket	1 1/8	29	28 1/4	71	1.53	44	5/16	8	396	180	1980	900

• Wire version with Stainless steel sheave

Deluxe Exit Blocks

SPB-2915F 5mm/#10
SPS-2915F

SPB-2916F 5mm/#10
SPS-2916F

SPB-2917F 5mm/#10
SPS-2917F

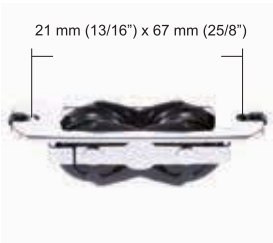

SPB-2918F 5mm/#10
SPS-2918F

SPB-2907F 5mm/#10
SPS-2907F

SPB-2908F 5mm/#10
SPS-2908F

SPB-2909F 5mm/#10
SPS-2909F

5mm/#10

SPB-2919F
SPS-2919F

SPB-2921F 5mm/#10
SPS-2921F

SPB-2910F 5mm/#10

SPB-2920F 5mm/#10

■ Cam arm can be reversed and cleat can be installed upside down.

*1 becket load should not exceed 30% of block load.
*2 Safe working and breaking load for Cam models based on Cam strength.

Item No.	Description	Sheave in	Sheave mm	Length in	Length mm	Weight oz	Weight g	Max line size in	Max line size mm	Safe working load lb	Safe working load kg	Breaking load lb	Breaking load kg
SPB-2915F	Single/Vertical	1 1/8	29	16 3/5	42	1.66	47	5/16	8	396	180	1980	900
SPB-2916F	Double/Vertical	1 1/8	29	16 3/5	42	2.42	69	5/16	8	396	180	1980	900
SPB-2917F	Single/Stainless steel/Deck exit	1 1/8	29	28 1/3	72	1.31	37	5/16	8	396	180	1980	900
SPB-2918F	Double/Stainless steel/Deck exit	1 1/8	29	37 2/5	95	1.91	54	5/16	8	396	180	1980	900
SPB-2907F	Single/Composite/Deck exit	1 1/8	29	29 1/7	74	1.06	30	5/16	8	396	180	1980	900
SPB-2908F	Double/Composite/Deck exit	1 1/8	29	38 4/7	98	1.61	46	5/16	8	396	180	1980	900
SPB-2909F	Cheek	1 1/8	29	26 1/3	66	0.97	28	5/16	8	396	180	1980	900
SPB-2919F	Cheek/Pivot	1 1/8	29	20 6/7	53	0.86	25	5/16	8	396	180	1980	900
SPB-2921F	Exit/Cam	1 1/8	29	34 5/7	88	4.16	118	1/4	6	160	80	160	80
SPB-2910F	Swivel exit/Cam	1 1/8	29	29 1/7	74	3.74	106	1/4	6	160	80	352	160
SPB-2920F	Swivel exit/Cam/Becket	1 1/8	29	29 1/7	74	4.08	115	1/4	6	160	80	352	160
• **SPS-2915F**	Single/Vertical	1 1/8	29	16 3/5	42	3.48	62	5/16	8	396	180	1980	900
• **SPS-2916F**	Double/Vertical	1 1/8	29	16 3/5	42	2.96	99	5/16	8	396	180	1980	900
• **SPS-2917F**	Single/Stainless steel/Deck exit	1 1/8	29	28 1/3	72	1.83	52	5/16	8	396	180	1980	900
• **SPS-2918F**	Double/Stainless steel/Deck exit	1 1/8	29	37 2/5	95	2.96	84	5/16	8	396	180	1980	900
• **SPS-2907F**	Single/Composite/Deck exit	1 1/8	29	29 1/7	74	1.59	45	5/16	8	396	180	1980	900
• **SPS-2908F**	Double/Cam/Deck exit	1 1/8	29	38 4/7	98	2.66	76	1/4	6	160	80	352	160
• **SPS-2909F**	Cheek	1 1/8	29	26 1/3	66	1.50	43	5/16	8	396	180	1980	900
• **SPS-2919F**	Cheek/Pivot	1 1/8	29	20 6/7	53	1.39	40	1/4	6	160	80	352	160
• **SPS-2921F**	Exit/Cam	1 1/8	29	34 5/7	88	4.69	133	5/16	8	396	180	1980	900

• Wire version with Stainless steel sheave

Deluxe 38mm

38mm blocks are ideal for almost all control line applications. They are hybrid with composites and 316L Stainless steel. Derlin® sheave is running with two races of Derlin® carbon black ball bearing for UV protection and smooth rotation.

Wire blocks feature 316L Stainless steel sheave to carry high loads for durability and corrosion resistance.

SPB-3801F
SPS-3801F

SPB-3802F
SPS-3802F

SPB-3814F
SPS-3814F

SPB-3803F
SPS-3803F

SPB-3804F
SPS-3804F

SPB-3805F
SPS-3805F

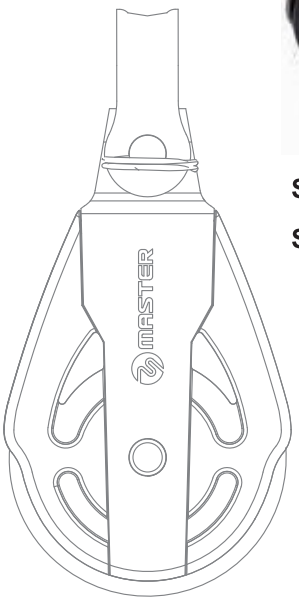

Actual size

SPB-3806F
SPS-3806F

SPB-3813F
SPS-3813F

SPB-3811F
SPS-3811F

SPB-3812F
SPS-3812F

*1 becket load should not exceed 30% of block load.
*2 Safe working and breaking load for Cam models based on Cam strength.

Item No.	Description	Sheave in	Sheave mm	Length in	Length mm	Weight oz	Weight g	Max line/wire size in	Max line/wire size mm	Safe working load lb	Safe working load kg	Breaking load lb	Breaking load kg
SPB-3801F	Single	11/2	38	294/5	76	1.83	52	3/8	10	484	220	2090	950
SPB-3802F	Single/Swivel/Becket	11/2	38	383/4	98	2.10	60	3/8	10	484	220	2090	950
SPB-3803F	Double	11/2	38	321/2	83	3.71	105	3/8	10	484	220	2090	950
SPB-3804F	Double/Becket	11/2	38	413/7	105	3.88	110	3/8	10	484	220	2090	950
SPB-3805F	Triple	11/2	38	336/7	86	5.52	157	3/8	10	484	220	2090	950
SPB-3806F	Triple/Becket	11/2	38	431/9	110	6.03	171	3/8	10	484	220	2090	950
SPB-3813F	Single/Swivel	11/2	38	301/4	77	2.08	59	1/4	6	176	80	352	160
SPB-3811F	Single	11/2	38	244/7	62	1.52	43	3/8	10	484	220	2090	950
SPB-3812F	Single/Becket	11/2	38	336/7	86	1.80	51	3/8	10	484	220	2090	950
• SPS-3801F	Single	11/2	38	294/5	76	3.42	97	3/8	10	484	220	2090	950
• SPS-3802F	Single/Swivel/Becket	11/2	38	383/4	98	3.69	105	3/8	10	484	220	2090	950
• SPS-3803F	Double	11/2	38	321/2	83	6.88	195	3/8	10	484	220	2090	950
• SPS-3804F	Double/Becket	11/2	38	413/7	105	7.06	200	1/4	6	176	80	352	160
• SPS-3805F	Triple	11/2	38	336/7	86	10.29	292	3/8	10	484	220	2090	950
• SPS-3806F	Triple/Becket	11/2	38	431/9	110	10.80	306	3/8	10	484	220	2090	950
• SPS-3813F	Single/Swivel	11/2	38	301/4	77	6.85	194	1/4	6	176	80	352	160
• SPS-3811F	Single	11/2	38	244/7	62	3.11	88	3/8	10	484	220	2090	950
• SPS-3812F	Single/Becket	11/2	38	336/7	86	3.39	96	3/8	10	484	220	2090	950
SPS-3814F	Single/Swivel/Becket	11/2	38	336/7	86	2.36	67	3/8	10	484	220	2090	950
• SPS-3814F	Single/Swivel/Becket	11/2	38	336/7	86	2.36	67	3/8	10	484	220	2090	950

• Wire version with Stainless steel sheave

www.aquatech.fun

Deluxe Exit Blocks

SPB-3815F

SPB-3816F

SPB-3809F

SPB-3819F

SPB-3807F

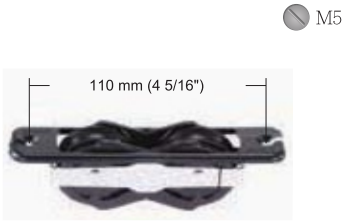

SPB-3808F

SPB-3810F

*1 becket load should not exceed 30% of block load.
*2 Safe working and breaking load for Cam models based on Cam strength.

Item No.	Description	Sheave in	Sheave mm	Length in	Length mm	Weight oz	Weight g	Max line size in	Max line size mm	Safe working load lb	Safe working load kg	Breaking load lb	Breaking load kg
SPB-3815F	Single/Vertical	1 1/2	38	21 2/3	55	2.91	83	3/8	10	484	220	2090	950
SPB-3816F	Double/Vertical	1 1/2	38	21 2/3	55	4.38	124	3/8	10	484	220	2090	950
SPB-3809F	Cheek	1 1/2	38	33 1/9	84	1.82	52	3/8	10	484	220	2090	950
SPB-3807F	Single/Composite/Deck exit	1 1/2	38	35	89	1.94	55	3/8	10	484	220	2090	950
SPB-3808F	Double/Composite/Deck exit	1 1/2	38	50	127	2.98	85	3/8	10	484	220	2090	950
SPB-3810F	Swivle exit/Cam	1 1/2	38	38	96	6.86	195	1/4	6	484	220	2090	950
SPB-3819F	Fixed lead	1 1/2	38			2.50	71	3/8	10	484	220	2090	950

Deluxe 57/76mm

57mm/76mm blocks are ideal for Mainsheet system on dinghies, racing boats and small keelboats.They are hybrid with composites and 316L Stainless steel. Derlin® sheave is running with two races of Derlin® carbon black ball bearing for UV protection and smooth rotation. Our lock shackle can be easily engaged to position in either of two directions or just let block free to swivel to keep line from twisting without hassle.

SPB-5701F

SPB-7601F
SPB-7601HL
SPB-7601HLA

SPB-5702F

SPB-7602F
SPB-7602HL

SPB-5703F

SPB-5704F

SPB-5709F

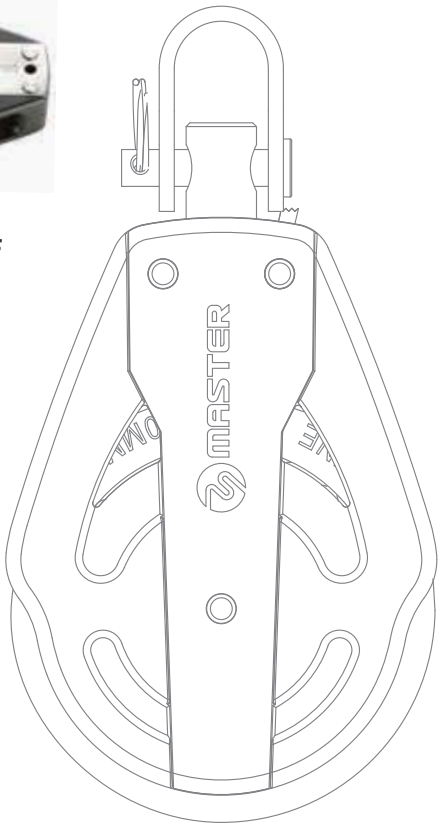

Actual size

Exit & Vertical

SPB-5714F

SPB-5724F

*1 becket load should not exceed 30% of block load.
*2 Safe working and breaking load for Cam models based on Cam strength.

Item No.	Description	Sheave in	Sheave mm	Length in	Length mm	Weight oz	Weight g	Max line/wire size in	Max line/wire size mm	Safe working load lb	Safe working load kg	Breaking load lb	Breaking load kg
SPB-5701F	Single/Swivel	21/4	57	411/6	104	4.22	119	1/2	12	550	250	2530	1150
SPB-5702F	Single/Swivel/Becket	21/4	57	502/3	128	4.64	131	1/2	12	550	250	2530	1150
SPB-5703F	Double	21/4	57	462/3	118	9.10	258	1/2	12		500	2530	1150
SPB-5704F	Double/Becket	21/4	57	571/3	145	9.45	268	1/2	12		500	2530	1150
SPB-5709F	Cheek	21/4	57	312/3	80	3.33	94	1/2	12	550	250	2530	1150
SPB-5714F	Single/Vertical	21/4	57	281/3	71	6.53	185	1/2	12	220	100	440	200
SPB-5724F	Single/Stainless steel deck exit	21/4	57	281/3	71	6.18	175	1/2	12	220	100	440	200
SPB-7601F	Single/Swivel	3	76	531/7	135	9.80	276	3/16	14	1870	850	3740	1700
SPB-7601HL	Single/Swivel/HL	3	76	591/4	150	11.50	326	3/8	14	2200	1000	4400	2000
SPB-7601HLA	Single/Swivel/AL sheave/HL	3	76	531/7	135	10.10	286	3/16	14	1870	850	3740	1700
SPB-7602F	Single/Swivel/Becket	3	76	622/3	159	10.50	298	3/16	14	1870	850	3740	1700
SPB-7602HL	Single/Swivel/Becket/HL	3	76	685/8	174	12.10	344	3/16	14	2200	1000	4400	2000

SPB-7603HL

SPB-7604HL

SPB-7605HL

SPB-7606F

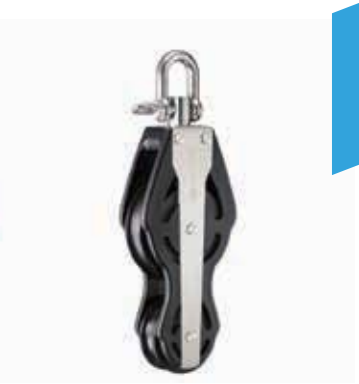

SPB-7619HL

SPB-7620HL

SPB-7622HL

SPB-7607F

SPB-7609HL

*1 becket load should not exceed 30% of block load.
*2 Safe working and breaking load for Cam models based on Cam strength.

Item No.	Description	Sheave in	Sheave mm	Length in	Length mm	Weight oz	Weight g	Max line/wire size in	Max line/wire size mm	Safe working load lb	Safe working load kg	Breaking load lb	Breaking load kg
SPB-7603HL	Double/Swivel/HL	3	76	73 1/2	186	22.90	648	9/16	14	2200	1000	4400	2000
SPB-7604HL	Double/Swivel/Becket/HL	3	76	82 7/8	210	23.20	658	9/16	14	2200	1000	4400	2000
SPB-7605HL	Triple/Swivel/HL	3	76	75 1/6	190	30.20	856	9/16	14	2200	1000	4400	2000
SPB-7606F	Triple/Fiddle	3	76	82 2/7	209	39.60	1122	9/16	14	1870	850	3740	1700
SPB-7619HL	Single/Swivel/Fiddle/HL	3	76	82 1/5	208	15.10	429	9/16	14	2200	1000	4400	2000
SPB-7620HL	Single/Swivel/Fiddle/Becket/HL	3	76	90 2/3	230	15.70	445	9/16	14	2200	1000	4400	2000
SPB-7622HL	Single/Swivel/Fiddle/Becket/AL Cam/HL	3	76	90 2/3	230	17.47	495	1/2	12	220	100	440	200
SPB-7607F	Single/Swivel	3	76	51 1/3	130	9.40	265	1/2	12	220	100	440	200
SPB-7609HL	Cheek/HL	3	76	43 1/3	110	11.9	338	9/16	14	2200	1000	4400	2000

Auto Ratchet Blocks

Master Automatic ratchet blocks feature the highest holding power ever than classic ratchet blocks.

Ratchet block is made of UV resistant and lightweight and high density glass fiber reinforced composites for long-term durability and strength. The hard anodized Aluminum with 8 face sheave runs on UV resistant Derlin® Carbon black bearing system for excellent 15:1 holding power and maximum protection.An exclusive lock can be easily engaged to position shackle in either of two directions or just let block free to swivel.

They are available in 40mm, 57mm and 75mm sizes for all applications.

RA-0401F
RA-0501F
RA-0701F

RA-0402F
RA-0502F
RA-0702F

RA-0419F
RA-0519F
RA-0719F

RA-0420F
RA-0520F
RA-0720F

RA-0403F
RA-0503F

RA-0405F
RA-0505F

RA-0412F
RA-0512F
RA-0712F

RA-0413F
RA-0513F
RA-0713F

*1 becket load should not exceed 30% of block load.
*2 Safe working and breaking load for Cam models based on Cam strength.

Item No.	Description	Sheave in	Sheave mm	Length in	Length mm	Weight oz	Weight g	Max line/wire size in	Max line/wire size mm	Safe working load lb	Safe working load kg	Breaking load lb	Breaking load kg
RA-0401F	Single/Swivel	19/16	40	353/7	90	2.12	60	3/8	10	330	150	1100	500
RA-0402F	Single/Swivel/Becket	19/16	40	405/9	103	2.26	64	3/8	10	330	150	1100	500
RA-0419F	Single/Swivel/Fiddle	19/16	40	453/5	116	2.61	74	3/8	10	330	150	1100	500
RA-0420F	Single/Swivel/Fiddle/Becket	19/16	40	512/3	131	2.68	76	3/8	10	330	150	1100	500
RA-0403F	Double/Swivel	19/16	40	353/7	90	3.84	109	3/8	10	330	150	1100	500
RA-0405F	Triple/Swivel	19/16	40	353/7	90	4.53	128	3/8	10	330	150	1100	500
RA-0412F	Triple/Swivel/Cam	19/16	40	353/7	90	6.51	184	1/4	6	176	80	352	160
RA-0413F	Triple/Swivel/Cam/Becket	19/16	40	413/4	106	6.65	188	1/4	6	176	80	352	160
RA-0501F	Single/Swivel	21/4	57	441/2	113	4.45	126	3/8	10	506	230	1980	900
RA-0502F	Single/Swivel/Becket	21/4	57	441/2	133	4.83	137	3/8	10	506	230	1980	900
RA-0519F	Single/Swivel/Fiddle	21/4	57	601/4	153	5.49	155	3/8	10	506	230	1980	900
RA-0520F	Single/Swivel/Fiddle/Becket	21/4	57	688/9	175	5.80	164	3/8	10	506	230	1980	900
RA-0503F	Double/Swivel	21/4	57	441/2	113	8.50	239	3/8	10	506	230	1980	900
RA-0505F	Triple/Swivel	21/4	57	441/2	113	9.70	274	3/8	10	506	230	1980	900
RA-0512F	Triple/Swivel/Cam	21/4	57	462/7	118	14	396	3/8	10	220	100	440	200
RA-0513F	Triple/Swivel/Cam/Becket	21/4	57	542/3	139	14.30	403	3/8	10	220	100	440	200
RA-0701F	Single/Swivel	215/16	75	551/8	140	9.28	263	1/2	12	770	350	2640	1200
RA-0702F	Single/Swivel/Becket	215/16	75	641/3	163	10	284	1/2	12	770	350	2640	1200
RA-0712F	Triple/Swivel/Cam	215/16	75	577/8	147	27	766	1/2	12	220	100	440	200
RA-0713F	Triple/Swivel/Cam/Becket	215/16	75	67	170	27.80	789	1/2	12	220	100	440	200
RA-0719F	Single/Swivel/Fiddle	215/16	75			17	483	1/2	12	770	350	2640	1200
RA-0720F	Single/Swivel/Fiddle/Becket	215/16	75			17.80	505	1/2	12	770	350	2640	1200

www.aquatech.fun

RA-0410F
RA-0510F
RA-0710F

RA-0411F
RA-0511F
RA-0711F

RA-0421F
RA-0521F
RA-0721F

RA-0422F
RA-0522F
RA-0722F

RA-0514F

RA-0524F

RA-0423F
RA-0523F

RA-0409F-L/R

RA-0509F-L/R

RA-0709F-L/R

CNC machined 8 face black hard anodized Aluminum sheave for excellent 15:1 holding power and smooth rotation.

*1 becket load should not exceed 30% of block load.
*2 Safe working and breaking load for Cam models based on Cam strength.

Item No.	Description	Sheave in	Sheave mm	Length in	Length mm	Weight oz	Weight g	Max line/wire size in	Max line/wire size mm	Safe working load lb	Safe working load kg	Breaking load lb	Breaking load kg
RA-0410F	Single/Swivel/Cam	19/16	40	353/7	90	4.39	125	1/4	6	176	80	352	160
RA-0411F	Single/Swivel/Becket/Cam	19/16	40	405/9	103	4.52	128	1/4	6	176	80	352	160
RA-0421F	Single/Swivel/Fiddle/Cam	19/16	40	453/5	116	4.80	136	1/4	6	176	80	352	160
RA-0422F	Single/Swivel/Fiddle/Becket/Cam	19/16	40	512/3	131	4.94	140	1/4	6	176	80	352	160
RA-0423F	Triple/Swivel/Fiddle/Becket/Cam/29mm Swivel	19/16	40	353/7	90	7.75	220	1/4	6	176	80	352	160
RA-0409F	Cheek	19/16	40	23	59	2.81	80	3/8	10	330	150	1100	500
RA-0510F	Single/Swivel/Cam	21/4	57	441/2	113	9.17	260	3/8	10	220	100	440	200
RA-0511F	Single/Swivel/Becket/Cam	21/4	57	441/2	133	9.47	269	3/8	10	220	100	440	200
RA-0521F	Single/Swivel/Fiddle/Cam	21/4	57	601/4	153	10.06	285	3/8	10	220	100	440	200
RA-0522F	Single/Swivel/Fiddle/Becket/Cam	21/4	57	688/9	175	10.41	295	3/8	10	220	100	440	200
RA-0514F	Double/Swivel/Becket/Cam	21/4	57	542/3	139	14.50	411	3/8	10	506	230	1980	900
RA-0524F	Single/Swivel/Fiddle/Becket	21/4	57	70	178	18.10	513	3/8	10	506	230	1980	900
RA-0523F	Triple/Swivel/Fiddle/Becket/Cam/29mm Swivel	21/4	57	631/3	161	16.41	465	3/8	10	220	100	440	200
RA-0509F	Cheek	21/4	57	311/2	80	6.05	172	3/8	10	506	230	1980	900
RA-0710F	Single/Swivel/Cam	215/16	75	551/8	140	14.82	420	1/2	12	220	100	440	200
RA-0711F	Single/Swivel/Becket/Cam	215/16	75	641/3	163	15.58	442	1/2	12	220	100	440	200
RA-0709F	Cheek	215/16	75	431/3	110	11.77	334	1/2	12	770	350	2540	1200
RA-0721F	Single/Swivel/Fiddle/Cam	215/16	75			22.60	640	1/2	12	220	100	440	200
RA-0722F	Single/Swivel/Fiddle/Becket/Cam	215/16	75			23.40	662	1/2	12	220	100	440	200

MASTER
ahead of wind

Plain Bearing Blocks

Strong and Efficiency

Master high performance plain bearing blocks are engineered for all purposes. The block features free-spin bush to reduce friction and increase efficiency for smooth rotation. 316L Stainless steel shackle and high density glass fiber composite sideplates provide lightweight and longer service life

Strong Strength Material

Cutting edge new composite and 316L Stainless steel set perfect balance between weight and strength. The high strength composite sideplates feature high density glass fiber and UV stabilizer for ultimate strength and excellent weather-ability

Adjustable Cam

Cam can be easily adjusted and locked in positions.

Becket Pin

Backet pin is easy to remove and lock into becket hole and no tools required.

Lock Shackle

Our lock shackle can be easily engaged to position in either of two directions or just lets block free to swivel to keep line from twisting without hassle.

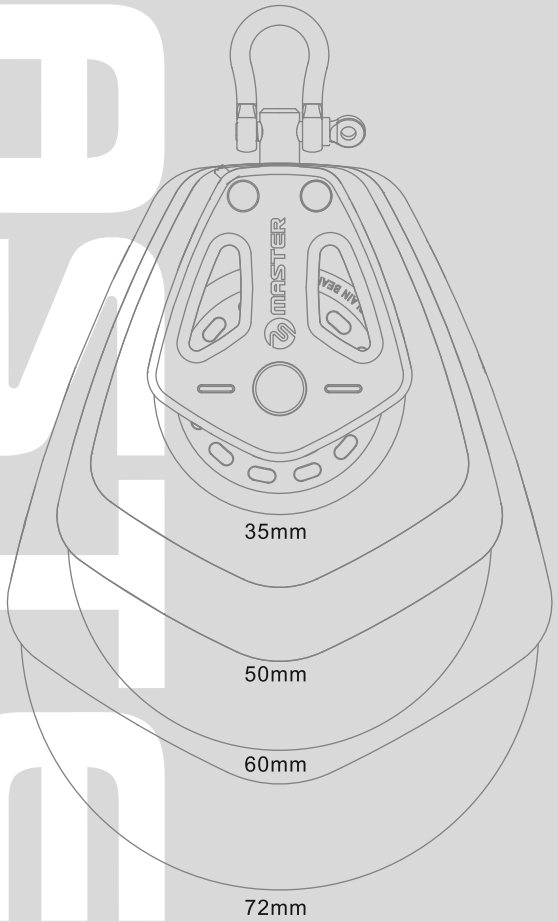

Plain Bearing 35/50mm

35mm blocks are ideal for sailboards, dinghies and control lines of all different configurations.

50mm plain bearing blocks are typically used for high loads for Halyard, Mainsheet systems, Mast foot blocks, Mast head blocks and boom vangs.

BP-3501F
BP-0501F

BP-3502F
BP-0502F

BP-0512F

BP-0512FE

BP-3503F
BP-0503F

BP-3504F
BP-0504F

BP-3505F
BP-0505F

BP-3513F
BP-0513F

BP-3513FE
BP-0513FE

BP-3511F
BP-0511F

BP-3511FE
BP-0511FE

*1 becket load should not exceed 30% of block load.
*2 Safe working and breaking load for Cam models based on Cam strength.

Item No.	Description	Sheave in	Sheave mm	Length in	Length mm	Weight oz	Weight g	Max line/wire size in	Max line/wire size mm	Safe working load lb	Safe working load kg	Breaking load lb	Breaking load kg
BP-3501F	Single/Swivel	13/8	35	3	78	1.29	36	5/16	8	660	300	1320	600
BP-3502F	Single/Swivel/Becket	13/8	35	35/7	94	1.50	42	5/16	8	660	300	1320	600
BP-3503F	Double/Swivel	13/8	35	3	78	2.07	58	5/16	8		600		1000
BP-3504F	Double/Swivel/Becket	13/8	35	35/7	94	2.27	64	5/16	8		600		1000
BP-3505F	Triple/Swivel	13/8	35	3	78	2.94	83	5/16	8		900		1666
BP-3513F	Triple/Swivel/Cam/Becket	13/8	35	35/7	94	4.97	140	5/16	8		900		1666
BP-3513FE	Triple/Swivel/Cam/Angle/Becket	13/8	35	35/7	94	5.19	147	5/16	8		900		1666
BP-3511F	Single/Swivel/Cam/Becket	13/8	35	35/7	94	3.33	94	5/16	8	660	300	1320	600
BP-3511FE	Single/Swivel/Cam/Angle/Becket	13/8	35	35/7	94	3.55	100	5/16	8	660	300	1320	600
BP-0501F	Single/Swivel	2	50	4	101	2.47	70	3/8	10	1148	522	2310	1050
BP-0502F	Single/Swivel/Becket	2	50	45/7	120	3.39	96	3/8	10	1148	522	2310	1050
BP-0503F	Double/Swivel	2	50	4	101	4.43	125	3/8	10		1044		1750
BP-0504F	Double/Swivel/Becket	2	50	45/7	120	4.75	134	3/8	10		1044		1750
BP-0505F	Triple/Swivel	2	50	4	101	6.32	179	3/8	10		1566		2916
BP-0513F	Triple/Swivel/Cam/Becket	2	50	45/7	120	10.11	286	3/8	10		1566		2916
BP-0513FE	Triple/Swivel/Cam/Angle/Becket	2	50	45/7	120	10.34	293	3/8	10		1566		2916
BP-0511F	Single/Swivel/Cam/Becket	2	50	45/7	120	6.49	184	3/8	10	1148	522	2310	1050
BP-0511FE	Single/Swivel/Cam/Angle/Becket	2	50	45/7	120	6.55	185	3/8	10	1148	522	2310	1050
BP-0512F	Triple/Swivel/Cam	2	50	4	101			3/8	10	220	100	440	200
BP-0512FE	Triple/Swivel/Cam/Angle	2	50	4	101			3/8	10	220	100	440	200

BP-3521F
BP-0521F

BP-3521FE
BP-0521FE

BP-3522F
BP-0522F

BP-3522FE
BP-0522FE

BP-3519F
BP-0519F

BP-3520F
BP-0520F

BP-0507F

Model	A	B	C
BP-0507F	13mm	4.9mm	8.2mm
BP-0607F	15mm	6.2mm	7.0mm
BP-7207F	18mm	8.0mm	9.85mm
BP-0907F	23mm	10mm	14.4mm

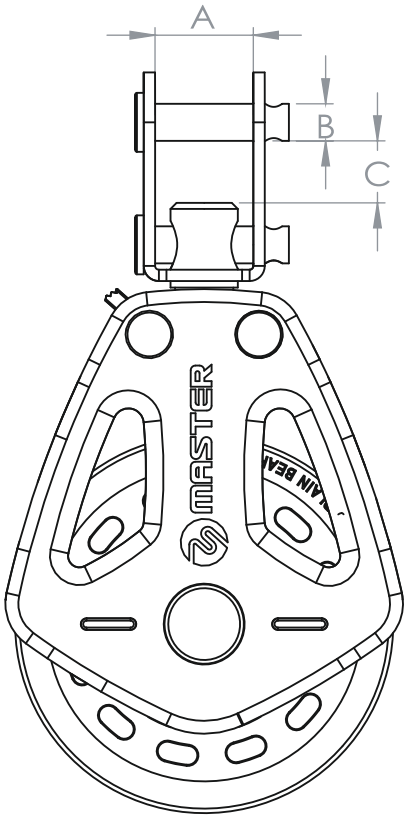

*1 becket load should not exceed 30% of block load.
*2 Safe working and breaking load for Cam models based on Cam strength.

Item No.	Description	Sheave in	Sheave mm	Length in	Length mm	Weight oz	Weight g	Max line size in	Max line size mm	Safe working load lb	Safe working load kg	Breaking load lb	Breaking load kg
BP-3521F	Single/Swivel/Fiddle/Cam	13/8	35	4	101	3.46	98	5/16	8	176	80	352	160
BP-3521FE	Single/Swivel/Fiddle/Cam/Angle	13/8	35	4	101	3.68	104	5/16	8	176	80	352	160
BP-3522F	Single/Swivel/Fiddle/Cam/Becket	13/8	35	45/8	117	3.62	102	5/16	8	176	80	352	160
BP-3522FE	Single/Swivel/Fiddle/Cam/Angle/Becket	13/8	35	45/8	117	3.84	108	5/16	8	176	80	352	160
BP-3519F	Single/Swivel/Fiddle	13/8	35	4	101	1.63	46	5/16	8	660	300	1320	600
BP-3520F	Single/Swivel/Fiddle/Becket	13/8	35	45/8	117	1.80	50	5/16	8	660	300	1320	600
BP-0521F	Single/Swivel/Fiddle/Cam	2	50	51/8	130	6.88	195	3/8	10	1148	522	2310	1050
BP-0521FE	Single/Swivel/Fiddle/Cam/Angle	2	50	51/8	130	7.27	206	3/8	10	1148	522	2310	1050
BP-0522F	Single/Swivel/Fiddle/Cam/Becket	2	50	54/5	147	7.16	203	3/8	10	1148	522	2310	1050
BP-0522FE	Single/Swivel/Fiddle/Cam/Angle/Becket	2	50	54/5	147	7.55	214	3/8	10	1148	522	2310	1050
BP-0519F	Single/Swivel/Fiddle	2	50	51/8	130	3.62	102	3/8	10	1148	522	2310	1050
BP-0520F	Single/Swivel/Fiddle/Becket	2	50	54/5	147	3.85	109	3/8	10	1148	522	2310	1050
BP-0507F	Toggle Head	2	50	31/2	90	2.95	83	3/8	10	1148	522	2310	1050

Plain Bearing 60/72mm

60mm and 72mm blocks can handle extremely high loads. They are typically used for Halyard tuning, Mainsheet systems, Mast foot blocks, Mast head blocks and boom vangs.

Lock shackle can be easily engaged to position in either of two direction or just lets block free to swivel to keep line from twisting.

Free tool becket pin is easy to remove and lock into keyhole.

BP-0601F
BP-7201F

BP-0602F
BP-7202F

BP-0603F
BP-7203F

BP-0604F
BP-7204F

BP-0605F
BP-7205F

BP-0613F
BP-7213F

BP-0613FE
BP-7213FE

*1 becket load should not exceed 30% of block load.
*2 Safe working and breaking load for Cam models based on Cam strength.

Item No.	Description	Sheave in	Sheave mm	Length in	Length mm	Weight oz	Weight g	Max line/wire size in	Max line/wire size mm	Safe working load lb	Safe working load kg	Breaking load lb	Breaking load kg
BP-0601F	Single/Swivel	21/3	60	41/2	114	4.40	125	1/2	12	1320	600	2640	1200
BP-0602F	Single/Swivel/Becket	21/3	60	57/16	138	5.14	146	1/2	12	1320	600	2640	1200
BP-0603F	Double/Swivel	21/3	60	42/3	118	7.05	200	1/2	12		1200		2000
BP-0604F	Double/Swivel/Becket	21/3	60	57/16	138	7.76	220	1/2	12		1200		2000
BP-0605F	Triple/Swivel	21/3	60	42/3	118	9.94	282	1/2	12		1800		3333
BP-0613F	Triple/Swivel/Cam/Becket	21/3	60	57/16	138	14.67	416	1/2	12		1800		3333
BP-0613FE	Triple/Swivel/Cam/Angle/Becket	21/3	60	57/16	138	15.02	426	1/2	12		1800		3333
BP-7201F	Single/Swivel	25/6	72	51/2	140	7.68	218	1/2	12	2200	1000	4400	2000
BP-7202F	Single/Swivel/Becket	25/6	72	63/5	168	8.81	250	1/2	12	2200	1000	4400	2000
BP-7203F	Double/Swivel	25/6	72	55/8	143	12.24	347	1/2	12		2000		3333
BP-7204F	Double/Swivel/Becket	25/6	72	62/3	170	13.26	376	1/2	12		2000		3333
BP-7205F	Triple/Swivel	25/6	72	54/5	147	17.42	494	1/2	12		3000		5555
BP-7213F	Triple/Swivel/Cam/Becket	25/6	72	62/3	170	23.25	659	1/2	12		3000		5555
BP-7213FE	Triple/Swivel/Cam/Angle/Becket	25/6	72	62/3	170	23.53	667	1/2	12		3000		5555

BP-0612F
BP-7212F

BP-0612FE
BP-7212FE

BP-0621F
BP-7221F

BP-0621FE
BP-7221FE

BP-0611F
BP-7211F

BP-0611FE
BP-7211FE

BP-0622F
BP-7222F

BP-0622FE
BP-7222FE

BP-0619F
BP-7219F

BP-0620F
BP-7220F

BP-0607F
BP-7207F

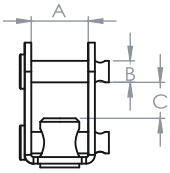

Model	A	B	C
BP-0607F	13mm	4.9mm	8.2mm
BP-7207F	15mm	6.2mm	7.0mm

*1 becket load should not exceed 30% of block load.
*2 Safe working and breaking load for Cam models based on Cam strength.

Item No.	Description	Sheave in	Sheave mm	Length in	Length mm	Weight oz	Weight g	Max line size in	Max line size mm	Safe working load lb	Safe working load kg	Breaking load lb	Breaking load kg
BP-0612F	Triple/Swivel/Cam	21/3	60	42/3	118	13.93	395	7/16	10		**1800**		**3333**
BP-0612FE	Triple/Swivel/Cam/Angle	21/3	60	42/3	118	14.32	406	7/16	10		**1800**		**3333**
BP-0621F	Single/Fiddle/Swivel/Cam	21/3	60	6	154	9.62	273	7/16	10	1320	600	3385	1539
BP-0621FE	Single/Fiddle/Swivel/Cam/Angle	21/3	60	6	154	9.91	281	7/16	10	1320	600	3385	1539
BP-0611F	Single/Swivel/Cam/Becket	21/3	60	57/16	138	8.88	252	7/16	10	1320	600	3385	1539
BP-0611FE	Single/Swivel/Cam/Angle/Becket	21/3	60	57/16	138	9.17	260	7/16	10	1320	600	3385	1539
BP-0622F	Single/Swivel/Fiddle/Cam/Becket	21/3	60	7	178	10.05	285	7/16	10	1320	600	3385	1539
BP-0622FE	Single/Swivel/Fiddle/Cam/Angle/Becket	21/3	60	7	178	10.33	293	7/16	10	1320	600	3385	1539
BP-0619F	Single/Swivel/Fiddle	21/3	60	6	154	5.89	167	7/16	10	1320	600	3385	1539
BP-0620F	Single/Swivel/Fiddle/Becket	21/3	60	7	178	6.27	178	7/16	10	1320	600	3385	1539
BP-0607F	Toggle Head	21/3	60	41/5	107	4.62	131	7/16	10	1320	600	3385	1539
BP-7212F	Triple/Swivel/Cam	25/6	72	62/3	170	22.33	663	7/16	12		**3000**		**5555**
BP-7212FE	Triple/Swivel/Cam/Angle	25/6	72	62/3	170	22.58	640	7/16	12		**3000**		**5555**
BP-7221F	Single/Fiddle/Swivel/Cam	25/6	72	71/2	190	14.71	417	7/16	12	2200	1000	4400	2000
BP-7221FE	Single/Fiddle/Swivel/Cam/Angle	25/6	72	71/2	190	15.03	426	7/16	12	2200	1000	4400	2000
BP-7211F	Single/Swivel/Cam/Becket	25/6	72	51/2	140	13.69	388	7/16	12	2200	1000	4400	2000
BP-7211FE	Single/Swivel/Cam/Angle/Becket	25/6	72	51/2	140	15.98	453	7/16	12	2200	1000	4400	2000
BP-7222F	Single/Swivel/Fiddle/Cam/Becket	25/6	72	82/5	213	22.92	650	7/16	12	2200	1000	4400	2000
BP-7222FE	Single/Swivel/Fiddle/Cam/Angle/Becket	25/6	72	82/5	213	16.29	462	7/16	12	2200	1000	4400	2000
BP-7219F	Single/Swivel/Fiddle	25/6	72	71/2	190	9.98	283	7/16	12	2200	1000	4400	2000
BP-7220F	Single/Swivel/Fiddle/Becket	25/6	72	82/5	213	11.25	319	7/16	12	2200	1000	4400	2000
BP-7207F	Toggle Head	25/6	72	57/16	138	8.04	228	7/16	12	1320	600	4780	2173

Plain Bearing 90mm

90mm blocks can handle extremely high loads. They are typically used for Halyard tuning, Mainsheet systems, Mast foot blocks, Mast head blocks and boom vangs.

BP-0901F

BP-0902F

BP-0903F

BP-0905F

BP-0907F

BP-0919F

BP-0920F

BP-0922F

BP-0922FE

*1 becket load should not exceed 30% of block load.
*2 Safe working and breaking load for Cam models based on Cam strength.

Item No.	Description	Sheave in	Sheave mm	Length in	Length mm	Weight oz	Weight g	Max line/wire size in	Max line/wire size mm	Safe working load lb	Safe working load kg	Breaking load lb	Breaking load kg
BP-0901F	Single/Swivel	21/3	90	72/5	188	16.40	465	9/16	14	3300	1500	7040	3200
BP-0902F	Single/Swivel/Becket	21/3	90	86/7	225	18.51	525	9/16	14	3300	1500	7040	3200
BP-0903F	Double/Swivel	21/3	90	71/2	190	24.87	705	9/16	14		3000		5333
BP-0905F	Triple/Swivel	21/3	90	71/2	190	34.22	970	9/16	14		4500		8888
BP-0907F	Toggle head	21/3	90	62/7	160	14.64	415	9/16	14	3300	1500	7040	3200
BP-0919F	Single/Swivel/Fiddle	21/3	90	95/6	250	21.55	611	9/16	14	3300	1500	7040	3200
BP-0920F	Single/Swivel/Fiddle/Becket	21/3	90	11	280	23.24	658	9/16	14	3300	1500	7040	3200
BP-0922F	Single/Swivel/Fiddle/AL Cam/Becket	21/3	90	11	280	30.01	850	7/16	12	3300	1500	7040	3200
BP-0922FE	Single/Swivel/Fiddle/AL Cam/Angle/Becket	21/3	90	11	280	30.20	856	7/16	12	3300	1500	7040	3200

16mm Stainless steel blocks

Master's smallest block is perfect for control lines on dinghies.16mm Stainless steel blocks feature contained Stainless steel ball bearing system for good rotation. Sideplates are 316L Stainless steel for long-term durability and maximum working load.

Both Derlin® composite(SB) and Stainless steel(SS) sheaves are available for 16mm blocks.

SS-1601F
SB-1601F

SS-1602F
SB-1602F

SS-1603F
SB-1603F

SS-1604F
SB-1604F

SS-1605F
SB-1605F

SS-1614F
SB-1614F

SS-1615F
SB-1615F

SS-1616F
SB-1616F

*1 becket load should not exceed 30% of block load.
*2 Safe working and breaking load for Cam models based on Cam strength.

Item No.	Description	Sheave in	Sheave mm	Length in	Length mm	Weight oz	Weight g	Max line/wire size in	Max line/wire size mm	Safe working load lb	Safe working load kg	Breaking load lb	Breaking load kg
SS-1601F	Single	5/8	16	103/7	26	0.47	13	7/32	5	264	120	1210	550
SB-1601F	Single	5/8	16	103/7	26	0.28	8	7/32	5	264	120	1210	550
SS-1602F	Single/Becket	5/8	16	141/7	35	0.51	14	7/32	5	264	120	1210	550
SB-1602F	Single/Becket	5/8	16	141/7	35	0.32	9	7/32	5	264	120	1210	550
SS-1603F	Double	5/8	16	143/4	37	0.92	26	7/32	5		240		1100
SB-1603F	Double	5/8	16	143/4	37	0.72	20	7/32	5		240		1100
SS-1604F	Double/Becket	5/8	16	181/2	47	0.92	27	7/32	5		240		1100
SB-1604F	Double/Becket	5/8	16	181/2	47	0.78	22	7/32	5		240		1100
SS-1605F	Triple	5/8	16	143/4	37	1.34	38	7/32	5		360		1650
SB-1605F	Triple	5/8	16	143/4	37	1.15	32	7/32	5		360		1650
SS-1614F	Single/Swivel/Shackle	5/8	16	18	46	0.76	21	7/32	5	264	120	1210	550
SB-1614F	Single/Swivel/Shackle	5/8	16	18	46	0.56	16	7/32	5	264	120	1210	550
SS-1615F	Stand-up	5/8	16	143/4	37	0.55	15	7/32	5	264	120	1210	550
SB-1615F	Stand-up	5/8	16	143/4	37	0.35	10	7/32	5	264	120	1210	550
SS-1616F	Ferruled head	5/8	16	143/4	37	0.51	14	5/32	4	264	120	1210	550
SB-1616F	Ferruled head	5/8	16	143/4	37	0.32	9	5/32	4	264	120	1210	550

*SS (Stainless steel sheave)

SS-1606F
SB-1606F

SS-1607F
SB-1607F

SS-1608F
SB-1608F

SS-1609F
SB-1609F

SS-1610F
SB-1610F

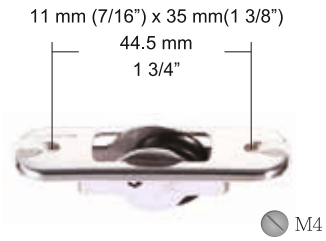

SS-1611F
SB-1611F

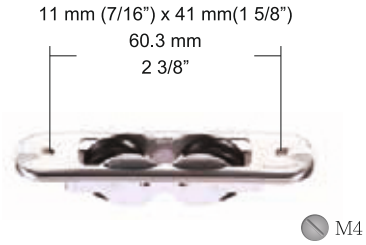

SS-1612F
SB-1612F

SS-1613F
SB-1613F

*1 becket load should not exceed 30% of block load.
*2 Safe working and breaking load for Cam models based on Cam strength.

Item No.	Description	Sheave in	Sheave mm	Length in	Length mm	Weight oz	Weight g	Max line/wire size in	Max line/wire size mm	Safe working load lb	Safe working load kg	Breaking load lb	Breaking load kg
SS-1606F	Triple/Becket	5/8	16	18 1/2	47	1.32	37	7/32	5	264	120	1210	550
SB-1606F	Triple/Becket	5/8	16	18 1/2	47	1.13	32	7/32	5	264	120	1210	550
SS-1607F	Forkhead	5/8	16	11 3/7	29	0.56	16	7/32	5	264	120	1210	550
SB-1607F	Forkhead	5/8	16	11 3/7	29	0.39	11	7/32	5	264	120	1210	550
SS-1608F	Cheek	5/8	16	18	45	0.51	14	7/32	5	264	120	1210	550
SB-1608F	Cheek	5/8	16	18	45	0.32	9	7/32	5	264	120	1210	550
SS-1609F	Cheek/Pivot	5/8	16	13 7/9	35	0.49	14	7/32	5	264	120	1210	550
SB-1609F	Cheek/Pivot	5/8	16	13 7/9	35	0.30	8	7/32	5	264	120	1210	550
SS-1610F	Hook	5/8	16	19 1/7	48	0.60	17	7/32	5	264	120	1210	550
SB-1610F	Hook	5/8	16	19 1/7	48	0.41	11	7/32	5	264	120	1210	550
SS-1611F	Single/Stainless steel/Deck exit	5/8	16	23 5/8	60	0.85	24	7/32	5	264	120	1210	550
SB-1611F	Single/Stainless steel/Deck exit	5/8	16	23 5/8	60	0.65	18	7/32	5	264	120	1210	550
SS-1612F	Single/Stainless steel/Deck exit	5/8	16	29 5/6	75	1.13	32	7/32	5	264	120	1210	550
SB-1612F	Single/Stainless steel/Deck exit	5/8	16	29 5/6	75	0.94	26	7/32	5	264	120	1210	550
SS-1613F	Swivel base	5/8	16	13	33	0.94	26	7/32	5	264	120	1210	550
SB-1613F	Swivel base	5/8	16	13	33	0.72	20	7/32	5	264	120	1210	550

22mm Stainless steel blocks

Master 22mm blocks are compact and lightweight. The block runs on two races of Stainless steel ball bearing for good rotation. Polished 316L Stainless steel sideplates are strong and durable.

SB-2201F

SB-2202F

SB-2203F

SB-2205F

SB-2210F

SB-2206F

SB-2207F

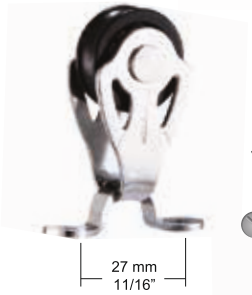

SB-2215F

SB-2211F

SB-2209F

SB-2227F

*1 becket load should not exceed 30% of block load.
*2 Safe working and breaking load for Cam models based on Cam strength.

Item No.	Description	Sheave in	Sheave mm	Length in	Length mm	Weight oz	Weight g	Max line/wire size in	Max line/wire size mm	Safe working load lb	Safe working load kg	Breaking load lb	Breaking load kg
SB-2201F	Single	7/8	22	14	35.6	0.48	13	1/4	6	330	150	1210	550
SB-2202F	Single/Becket	7/8	22	18 1/2	47	0.62	17	1/4	6	330	150	1210	550
SB-2203F	Double	7/8	22	18 1/2	47	1.82	35	1/4	6	330	150	1210	550
SB-2205F	Triple	7/8	22	18 8/9	48	1.98	51	1/4	6	330	150	1210	550
SB-2210F	Single/Swivel/Shackle	7/8	22	21 1/4	54	0.86	24	1/4	6	330	150	1210	550
SB-2206F	Triple/Becket	7/8	22	23 5/8	60	1.98	56	1/4	6	330	150	1210	550
SB-2207F	Forkhead	7/8	22	15 2/3	40	0.56	16	1/4	6	330	150	1210	550
SB-2215F	Stand-up	7/8	22	17 1/3	44	0.63	18	1/4	6	330	150	1210	550
SB-2211F	Single/Fiddle	7/8	22	25 3/5	65	0.85	24	1/4	6	330	150	1210	550
SB-2227F	Single/Shackle	7/8	22	20	50	0.78	22	1/4	6	330	150	1210	550
SB-2209F	Cheek	7/8	22	25	63	0.71	20	1/4	6	330	150	1210	550

SB-2212F

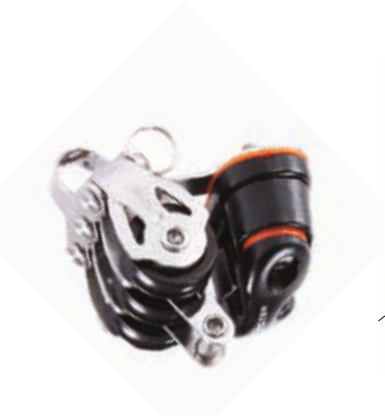

SB-2213F

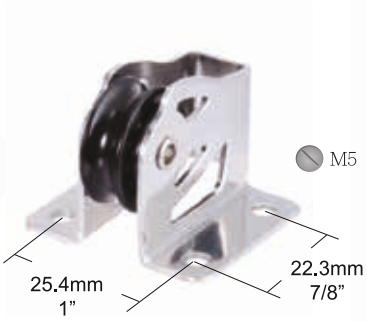

SB-2216F

SB-2228F

SB-2217F

SB-2218F

SB-2201FR

SB-2202FR

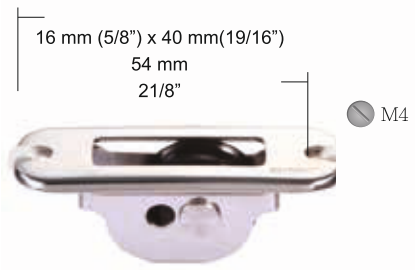

SB-2208F

SB-2214F

SB-2204F

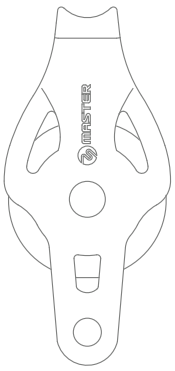

*1 becket load should not exceed 30% of block load.
*2 Safe working and breaking load for Cam models based on Cam strength.

Item No.	Description	Sheave in	Sheave mm	Length in	Length mm	Weight oz	Weight g	Max line/wire size in	Max line/wire size mm	Safe working load lb	Safe working load kg	Breaking load lb	Breaking load kg
SB-2212F	Triple/Cam	7/8	22	212/3	55	3.32	94	1/4	6	330	150	1210	550
SB-2213F	Triple/Becket/Cam	7/8	22	235/8	60	3.42	97	1/4	6	330	150	1210	550
SB-2216F	Single/Vertical	7/8	22	15	38	0.92	26	1/4	6	330	150	1210	550
SB-2228F	Single/Shackle/Becket	7/8	22	242/3	62	0.90	25	1/4	6	330	150	1210	550
SB-2217F	Fiddle/V Cam	7/8	22	345/6	88	1.76	50	1/4	6	330	150	1210	550
SB-2218F	Fiddle/V Cam/Becket	7/8	22	383/4	98	1.92	54	1/4	6	330	150	1210	550
SB-2201FR	removable sheave	7/8	22	14	35	0.56	16	1/4	6	330	150	1210	550
SB-2202FR	removable sheave/Becket	7/8	22	181/2	47	0.71	20	1/4	6	330	150	1210	550
SB-2208F	Single/Stainless steel/Deck exit	7/8	22	235/8	60	0.83	23	1/4	6	330	150	1210	550
SB-2214F	Connected	7/8	22	275/9	70	0.86	24	1/4	6	330	150	1210	550
SB-2204F	Double/Becket	7/8	22	235/8	60	1.36	38	1/4	6	330	150	1210	550

57mm/76mm Deluxe Ratchet Blocks

Master deluxe ratchet blocks are beautifully hybrid with composite and 316L Stainless steel to provide lightweight, compact, and more working loads than traditional ones. Our exclusive patented design offers both full automatic and manual modes in a single block. The new design simplifies all control switches into one.

The sophisticated NC machined hardcoat anodized Aluminum sheave with 8 faces provides excellent holding power to line movement.

The exclusive tool free shackle lock system can be easily engaged to position the shackle in either of two directions or just free to swivel. The unique design can handle more than traditional ways without damaging the blocks.

Two races of Derlin® ball bearing provide Aluminum sheave with good rotation and less friction.

RAS-0501F
RAS-0701F
RAS-0701HL

RAS-0502F
RAS-0702HL

RAS-0504F

RAS-0503F

RAS-0510F
RAS-0710F

RAS-0711F

RAS-0509F-L/R

*1 becket load should not exceed 30% of block load.
*2 Safe working and breaking load for Cam models based on Cam strength.

Item No.	Description	Sheave in	Sheave mm	Length in	Length mm	Weight oz	Weight g	Max line/wire size in	Max line/wire size mm	Safe working load lb	Safe working load kg	Breaking load lb	Breaking load kg
RAS-0501F	Single/Swivel	2 1/4	57	4 53/7	115	5.70	162	3/8	10	550	250	1100	500
RAS-0701F	Single/Swivel	2 15/16	76	5 51/3	140	12.60	358	9/16	14	770	350	1540	700
RAS-0701HL	Single/Swivel/High load	2 15/16	76	6 13/7	156	14.10	402	9/16	14	1100	500	2200	1000
RAS-0502F	Single/Swivel/Becket	2 1/4	57	5 14/7	131	6.60	186	3/8	10	550	250	1100	500
RAS-0702HL	Single/Swivel/Becket/HL	2 15/16	76	7 12/3	182	15.20	433	9/16	14	1100	500	2200	1000
RAS-0504F	Double/Swivel/Becket	2 1/4	57	5 23/4	134	12.30	348	3/8	10	550	250	1100	500
RAS-0503F	Double/Swivel	2 1/4	57	4 61/4	117	11.50	325	3/8	10	550	250	1100	500
RAS-0510F	Single/Swivel/Becket/Cam	2 1/4	57	5 77/8	147	11.50	326	3/8	10	330	150	660	300
RAS-0710F	Single/Swivel/Becket/Cam	2 15/16	76	6 75/7	172	21.80	616	9/16	14	330	150	660	300
RAS-0509F-L/R	Cheek/Right/Left	2 1/4	57	3 72/5	95	5.30	149	3/8	10	550	250	1100	500
RAS-0711F	Single/Swivel/Becket/AL Cam	2 15/16	76	3 72/5	95	21.20	600	9/16	14	330	150	660	300

RAS-0712HL

RAS-0713HL

RAS-0721HL

RAS-0722HL

*1 becket load should not exceed 30% of block load.
*2 Safe working and breaking load for Cam models based on Cam strength.

Item No.	Description	Sheave in	Sheave mm	Length in	Length mm	Weight oz	Weight g	Max line/wire size in	Max line/wire size mm	Safe working load lb	Safe working load kg	Breaking load lb	Breaking load kg
RAS-0712HL	Triple/Swivel/AL Cam/High load	2 15/16	76	75 1/3	191	46.30	1312	9/16	14	1100	500	2200	1000
RAS-0713HL	Triple/Swivel/AL Cam/Becket/High load	2 15/16	76	87 5/9	224	47.30	1342	9/16	14	1100	500	2200	1000
RAS-0721HL	Fiddle/Swivel/AL Cam/High load	2 15/16	76	82 1/6	208	29	823	9/16	14	1100	500	2200	1000
RAS-0722HL	Fiddle/Swivel/AL Cam/Becket/High load	2 15/16	76	91 1/3	232	29.60	839	9/16	14	1100	500	2200	1000
RAS-0709F-R	Cheek/Right	2 15/16	76	43 1/3	110	15.10	429	9/16	14	1100	500	2200	1000
RAS-0709F-L	Cheek/Left	2 15/16	76	43 1/3	110	15.10	429	9/16	14	1100	500	2200	1000

PR-5701F
PR-7501F

Poseidon Roller Bearing Blocks

The new Poseidon Aluminum Roller Bearing Block is made of Hardcoat Anodized Aluminum plates and Aluminum sheave for strong and durable performance. These blocks feature the first Torlon® roller bearing and the second race Derlin® ball bearing for smooth rotation and low friction under maximum loads. Patented lock-up swivel shackle can be locked either of two directions or just free to swivel.

Blocks can be easily disassembled with hex wrench for maintenance.

Ideal for mainsheet, halyard, runner, and spinnaker system. 57mm and 75mm sizes available.

1

Hardcoat Anodized Sideplates

Hardcoat Anodized Aluminum sideplates are lightweight, extra strength, and better performance for racers and cruisers. Both sideplates and sheave are Hardcoat Anodized Aluminum for UV protection and Anti corrsion.

2

Two Row Race Torlon Roller Bearing

Torlon® PAI provides exceptional wear resistance in both dry and lubricated environments and retains its toughness, high strength and high stiffness for low friction and free running under huge static loads.

Patented Lock Up Swivel Shackle

An exclusive lock up swivel shackle can be easily engagd to position shackle head in either of two directions or just free to swivel. Patented design allows shackle head to take more loads than traditional ways of lock without damaging the block.

3

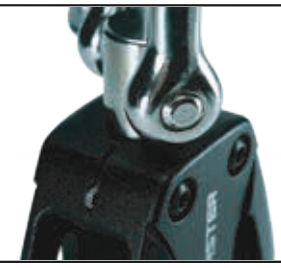

Torlon® is the trademark of Solvay Advanced Polymers.
Derlin® is the trademark of Dupont.

*1 becket load should not exceed 30% of block load.
*2 Safe working and breaking load for Cam models based on Cam strength.

Item No.	Description	Sheave in	Sheave mm	Length in	Length mm	Weight oz	Weight g	Max line/wire size in	Max line/wire size mm	Safe working load lb	Safe working load kg	Breaking load lb	Breaking load kg
PR-5701F	Single/Swivel	2 1/4	57	4 85/6	124	8.90	253	7/16	12	2420	800	4400	2000
PR-7501F	Single/Swivel	2 5/16	75	6 12/9	155	15.30	435	9/16	14	2420	800	4400	2000

Siren Aluminum Blocks

The Master range of Siren blocks are designed for efficiency and reliability in high load applications. The blocks feature a self-lubricating acetal bushing on a high strength 316L Stainless steel shaft for durability, while the robust lube hardcoat-anodized Aluminum sideplates brace a captive Derlin® ball bearing system that reduces overall friction.

The blocks are topped with a hand polished shackle of locking mechanism.

Screw Swivel shackle

An exclusive screw swivel shackle can be easily engagd to position shackle head in either of two directions or just free to swivel. This design allows shackle head to take more loads than traditional ways of lock without damaging the block.

Hardcoat Anodized 6061-T6 Aluminum CNC Sideplates

Hardcoat Anodized Aluminum sideplates are lightweight, extra strength, and better performance for racers and cruisers. Both sideplates and sheave are Hardcoat Anodized Aluminum for UV protection and Anti corrosion.

Derlin® Ball Bearing & Stainless steel shaft

The exclusive Derlin® composite ball bearing provides sheave with good rotation and less friction. The 316 L Stainless steel shaft enhance the strength for extremely high load.

Lube Hardcoat Anodized Aluminum Sheave

The sophisticated NC machined Aluminum sheave is lube hardcoat anodized to prevent corrosion for long term durability.

Derlin® is the trademark of Dupont.

RX-5001F

RX-6001F

RX-5002F

RX-6002F

RX-5019F

RX-6019F

RX-5020F

RX-6020F

*1 becket load should not exceed 30% of block load.
*2 Safe working and breaking load for Cam models based on Cam strength.

Item No.	Description	Sheave in	Sheave mm	Length in	Length mm	Weight oz	Weight g	Max line/wire size in	Max line/wire size mm	Safe working load lb	Safe working load kg	Breaking load lb	Breaking load kg
RX-5001F	Single/Swivel	2	50	43	109	5.50	155	3/8	10	1980	900	7920	3600
RX-5002F	Single/Swivel/Becket	2	50	514/5	131	6.00	169	3/8	10	1980	900	7920	3600
RX-5019F	Single/Swivel/Fiddle	2	50	58	147	7.50	212	3/8	10	1980	900	7920	3600
RX-5020F	Single/Swivel/Fiddle/Becket	2	50	655/9	166	7.80	222	3/8	10	1980	900	7920	3600
RX-6001F	Single/Swivel	23/8	60	49	124	8.50	241	1/2	12	3520	1600	11000	5000
RX-6002F	Single/Swivel/Becket	23/8	60	581/2	148	9.30	263	1/2	12	3520	1600	11000	5000
RX-6019F	Single/Swivel/Fiddle	23/8	60	661/2	169	11.40	324	1/2	12	3520	1600	11000	5000
RX-6020F	Single/Swivel/Fiddle/Becket	23/8	60	751/3	191	12.10	344	1/2	12	3520	1600	11000	5000

RX-7201F

RX-9001F

RX-7202F

RX-9002F

RX-7219F

RX-9019F

RX-7220F

RX-9020F

*1 becket load should not exceed 30% of block load.
*2 Safe working and breaking load for Cam models based on Cam strength.

Item No.	Description	Sheave in	Sheave mm	Length in	Length mm	Weight oz	Weight g	Max line/wire size in	Max line/wire size mm	Safe working load lb	Safe working load kg	Breaking load lb	Breaking load kg
RX-7201F	Single/Swivel	2 13/16	72	6 41/7	162	18.7	529	9/16	14	4620	2100	19800	9000
RX-7202F	Single/Swivel/Becket	2 13/16	72	7 52/7	191	20	568	9/16	14	4620	2100	19800	9000
RX-7219F	Single/Swivel/Fiddle	2 13/16	72	85	215	22.4	635	9/16	14	4620	2100	19800	9000
RX-7220F	Single/Swivel/Fiddle/Becket	2 13/16	72	9 43/4	240	23.6	670	9/16	14	4620	2100	19800	9000
RX-9001F	Single/Swivel	3 9/16	90	78	198	30.6	866	5/8	16	7920	3600	33000	15000
RX-9002F	Single/Swivel/Becket	3 9/16	90	9 18/9	233	33.1	939	5/8	16	7920	3600	33000	15000
RX-9019F	Single/Swivel/Fiddle	3 9/16	90					5/8	16	7920	3600	33000	15000
RX-9020F	Single/Swivel/Fiddle/Becket	3 9/16	90					5/8	16	7920	3600	33000	15000

Hercules Blocks

Powerful Performance

Master Hercules blocks are specialized made for Cruising boats to handle extremely high load. Available in Aluminum or polished stainless steel.

Hercules single and fiddle blocks are ideal for vang or mainsheet systems. Foot models with jammers can be used on the deck to guide the line and secure the sheet.

Metallic Sideplates

One piece machine made sideplate sets perfect balance between weight and strength. Appearance is black anodized Aluminum for long-term use.

Sleeve Bearing

Hercules blocks feature sleeve bearing to handle extremely high load

Durability

All materials are UV resistant and Anti-Corrosion for maximum protection and long lasting durability.

Lock Shackle

Our lock shackle can be easily engaged to position in either of two directions or just let block free to swivel to keep line from twisting without hassle.

Hercules
The Wave
MUSCAT · OMAN
MASTER

Hercules Aluminum Blocks 40mm/50mm/75mm

ALC-5701F
ALC-7501F

ALC-5702F
ALC-7502F

ALC-7519F

ALC-7520F

ALC-7522F

ALC-0409F

ALC-5709F
ALC-7509F

A	39.5mm
B	17.4mm

ALC-5709F	B	15.4mm
ALC-7509F	B	14.6mm

*1 becket load should not exceed 30% of block load.
*2 Safe working and breaking load for Cam models based on Cam strength.

Item No.	Description	Sheave in	Sheave mm	Length in	Length mm	Weight oz	Weight g	Max line/wire size in	Max line/wire size mm	Safe working load lb	Safe working load kg	Breaking load lb	Breaking load kg
ALC-5701F	Single/Swivel	2 1/4	57	55 1/4	140	9.28	263	5/8	16	2420	1100	4400	2000
ALC-5702F	Single/Swivel/Becket	2 1/4	57	67	170	9.99	283	5/8	16	2420	1100	4400	2000
ALC-5709F	Mast	2 1/4	57	37 2/5	95	4.09	116	5/8	16	2420	1100	4400	2000
ALC-7501F	Single/Swivel	3	75	65	165	12.42	352	3/4	19	3520	1600	7040	3200
ALC-7502F	Single/Swivel/Becket	3	75	77 1/3	197	13.02	369	3/4	19	3520	1600	7040	3200
ALC-7519F	Sigle/Swivel/Fiddle	3	75	87 2/5	222	15.01	426	3/4	19	3520	1600	7040	3200
ALC-7520F	Single/Swivel/Fiddle/Becket	3	75	99 3/5	253	16.23	460	3/4	19	3520	1600	7040	3200
ALC-7522F	Single/Swivel/Fiddle/AL Cam/Becket	3	75	99 3/5	253	24.51	695	3/4	19	3520	1600	7040	3200
ALC-0409F	Drop Foot	19/16	40	26 1/2	67	2.05	58	5/16	8	1320	600	2200	1000
ALC-7509F	Mast	3	75	46 4/7	118	8.05	228	3/4	19	3520	1600	7040	3200

ALC-5710F
ALC-7510F

ALC-5712F
ALC-7508F

ALC-5713F

ALC-5715F
ALC-7515F

ALC-5708F

ALC-5726F PinØ6mm
ALC-5728F PinØ8mm

ALC-5727F PinØ6mm

ALC-7511F

*1 becket load should not exceed 30% of block load.
*2 Safe working and breaking load for Cam models based on Cam strength.

Item No.	Description	Sheave in	Sheave mm	Length in	Length mm	Weight oz	Weight g	Max line/wire size in	Max line/wire size mm	Safe working load lb	Safe working load kg	Breaking load lb	Breaking load kg
ALC-5710F	Foot	2 1/4	57	37	94	7.16	203	5/8	16	2420	1100	4400	2000
ALC-5712F	Padeye	2 1/4	57	37 2/5	95	4.40	125	5/8	16	2420	1100	4400	2000
ALC-5713F	Padeye/Bolt	2 1/4	57	37 2/5	95	4.47	127	5/8	16	2420	1100	4400	2000
ALC-5715F	Foot/Jammer	2 1/4	57	37	94	8.92	253	5/8	16	2420	1100	4400	2000
ALC-5708F	High-load Mast	2 1/4	57	37 2/5	95	4.41	125	5/8	16	2420	1100	4400	2000
ALC-5726F	Narrow Mast/6mm	2 1/4	57	37 2/5	95	3.49	99	3/8	10	1650	750	3300	1500
ALC-5728F	Narrow Mast/8mm	2 1/4	57	37 2/5	95	4.83	137	3/8	10	1650	750	3300	1500
ALC-5727F	Forkhead	2 1/4	57	48	122	4.47	127	3/8	10	1650	750	3300	1500
ALC-7510F	Foot	3	75	44 1/6	112	10.47	297	3/4	19	3520	1600	7040	3200
ALC-7515F	Foot/Jammer	3	75	44 1/6	112	11.35	322	3/4	19	3520	1600	7040	3200
ALC-7511F	Narrow Mast	3	75	46	117	7.05	200	3/4	19	2530	1150	5060	2300
ALC-7508F	Padeye	3	75	46	117	8.30	236	3/4	19	3520	1600	7040	3200

Hercules Stainless steel Block 57/75mm

Hercules Stainless steel blocks are designed for Cruising boats to handle static high load. They are ideal for halyard or other applications.

Hercules swivel and fiddle blocks can build up 4:1 or less systems and they are perfect for vangs or mainsheet systems on Cruising boats from 10m to 14m.

SSC-5701F

SSC-7501F

SSC-5702F

SSC-7502F

SSC-7519F

SSC-7520F

SSC-5708F

SSC-5709F

SSC-7509F

SSC-5710F

SSC-7510F

SSC-5715F

SSC-7515F

*1 becket load should not exceed 30% of block load.
*2 Safe working and breaking load for Cam models based on Cam strength.

Item No.	Description	Sheave in	Sheave mm	Length in	Length mm	Weight oz	Weight g	Max line/wire size in	Max line/wire size mm	Safe working load lb	Safe working load kg	Breaking load lb	Breaking load kg
SSC-5701F	Single/Swivel	2 1/4	57	55 1/4	140	11.14	316	5/8	16	2420	1100	4400	2000
SSC-5702F	Single/Swivel/Becket	2 1/4	57	67	170	12.76	362	5/8	16	2420	1100	4400	2000
SSC-5708F	Padeye	2 1/4	57	37 2/5	95	7.33	208	5/8	16	2420	1100	4400	2000
SSC-5709F	Mast	2 1/4	57	37 2/5	95	7.33	208	3/8	10	1650	750	3300	1500
SSC-5715F	Drop Foot/Jammer	2 1/4	57	37	94	8.92	253	3/8	10	1650	750	3300	1500
SSC-5710F	Drop Foot	2 1/4	57	37	94	7.16	203	3/8	10	1650	750	3300	1500
SSC-7501F	Single/Swivel	3	75	65	165	18.65	529	3/4	19	3520	1600	7040	3200
SSC-7502F	Single/Swivel/Becket	3	75	77 1/3	197	21.23	602	3/4	19	3520	1600	7040	3200
SSC-7519F	Single/Swivel/Fiddle	3	75	87 2/5	222	23.66	671	3/4	19	2530	1150	5060	2300
SSC-7520F	Single/Swivel/Fiddle/Becket	3	75	99 3/5	253	26.03	738	3/4	19	3520	1600	7040	3200
SSC-7509F	Mast	3	75	46 4/7	118	14.49	411	3/4	19	3520	1600	7040	3200
SSC-7515F	Drop Foot/Jammer	3	75	44	112	16.80	448	3/4	19	2530	1150	5060	2300
SSC-7510F	Drop Foot	3	75	44	112	14.07	399	3/4	19	2530	1150	5060	2300

Titan Snatch Blocks 38/57/75mm

Master Titan Snatch blocks can help crew rapidly and efficiently lash blocks. Torlon® ball bearing can handle static high loads and Hardcoat anodized sideplates prevent the block from corrosion.

The 316 L Stainless steel shaft enhances the strength for extremely high load.

Crew can quickly fasten these opening blocks wherever needed. ULC bearing technology ensures sheaves turning smoothly and maintaining efficiency at high loads. Snap-fit Torlon® ball bearings handle thrust loads, and the integral head-spacer prevents the hardcoat-anodized sideplates from binding the sheave. The articulated loop carries the block's primary load.

Sideplate can easily be opened and apply the line.

*1 becket load should not exceed 30% of block load.
*2 Safe working and breaking load for Cam models based on Cam strength.

Torlon® is the trademark of Solvay Advanced Polymers.

Item No.	Description	Sheave in	Sheave mm	Length in	Length mm	Weight oz	Weight g	Max line/wire size in	Max line/wire size mm	Safe working load lb	Safe working load kg	Breaking load lb	Breaking load kg
TS-3801F	Snatch	1 1/2	38	2 1/3	59	4.9	139	1/2	12	5280	2400	11000	5000
TS-5701F	Snatch	2 1/4	57	3 1/2	88	10.3	293	5/8	16	12100	5500	22000	10000
TS-7501F	Snatch	3	75	4 5/9	115	22.2	630	3/4	18	18700	8500	37400	17000

Pivoting Lead, Upright Lead & Halyard Blocks 45/57/75/76mm

Master pivoting lead block is made of CNC machined black hardcoat anodized Aluminum alloy cheeks to provide excellent strength and lightweight. Derlin® sheave with UV protection runs on two races of Derlin® ball bearing for smooth rotation and less friction. Cleat models are all with Aluminum cleats for fast trim and release.

Master upright lead & Halyard blocks are all made of one piece CNC machined black hardcoat anodized Aluminum for extra strength.

Halyard block comes in single, double, and triple configurations.

HL-0501F
HL-0701F

HL-4501F

HL-0502F

HL-0503F

HL-0504F

FF-0502F
FF-0702F

FF-0501F
FF-0701F

FF-0501FE
FF-0701FE

*1 becket load should not exceed 30% of block load.
*2 Safe working and breaking load for Cam models based on Cam strength.

Item No.	Description	Sheave in	Sheave mm	Length in	Length mm	Weight oz	Weight g	Max line size in	Max line size mm	Safe working load lb	Safe working load kg	Breaking load lb	Breaking load kg
HL-0501F	Upright Lead	2 1/4	57	4	78	5.29	150	3/8	10	2640	1200	5500	2500
HL-0701F	Upright Lead	3	76	4 1/7	105	11.29	320	1/2	12	5060	2300	10120	4600
HL-4501F	Single/Halyard	1 3/4	45	3	76	5.11	145	3/8	10	2640	1200	5500	2500
HL-0502F	Single/Halyard	2 1/4	57	3 1/4	82	9.88	280	3/8	10	2640	1200	5500	2500
HL-0503F	Double/Halyard	2 1/4	57	3 1/4	82	14.82	420	3/8	10	2640	1200	5500	2500
HL-0504F	Triple/Halyard	2 1/4	57	3 1/4	82	5.64	160	3/8	10	2640	1200	5500	2500
FF-0502F	Pivoting Lead	2 1/4	57	4 4/7	116	5.70	161	3/8	10	2640	1200	5500	2500
FF-0702F	Pivoting Lead	3	75	5 5/7	145	10.09	286	3/8	10	5060	2300	10120	4600
FF-0501F	Pivoting Lead/Cam	2 1/3	57	4 4/7	116	9.79	277	3/8	10				
FF-0701F	Pivoting Lead/Cam	3	75	5 5/7	145	15.90	442	3/8	10				
FF-0501FE	Pivoting Lead/Cam/Angle	2 1/4	57	4 4/7	116	10.07	285	3/8	10				
FF-0701FE	Pivoting Lead/Cam/Angle	3	75	5 5/7	145	16.01	454	7/16	12				

Optimist Blocks

Master's range of Optimist blocks includes Toggle head ratchet block for mainsheet, ball bearing blocks and plain bearing blocks for Optimist class and other dinghies.

Hook blocks help sailors to easily adjust halyard. The 16mm Derlin® or 316 L Stainless steel sheave with Stainless steel ball bearing provides good rotation and less friction.

RA-0507F

OS-0002F

OS-0003F

OS-0001F

*1 becket load should not exceed 30% of block load.
*2 Safe working and breaking load for Cam models based on Cam strength.

Item No.	Description	Sheave in	Sheave mm	Length in	Length mm	Weight oz	Weight g	Max line size in	Max line size mm	Safe working load lb	Safe working load kg	Breaking load lb	Breaking load kg
OS-1601F	Hook(B)	5/8	16	11/2	38	0.28	8	3/16	5				
OS-1602F	Hook(S)	5/8	16	16/7	47	0.35	10	3/16	5				
RA-0507F	Ratchet/Toggle head	21/4	57	5	128	4.52	128	3/8	10	506	230	1980	900
OS-0002F	40mm Single/Snap shackle	19/16	40	23/4	70	2.77	78	1/4	6	506	230	1760	800
OS-0003F	29mm/40mm Fiddle set	19/16/11/8	40/29	51/8	130	1.76	50	1/4	6	352	160	1100	500
OS-0001F	40mm Single/Snap shackle/Dyneema® line	19/16	40	192/3	500	1.73	49	1/4	6	506	230	1760	800

OS-0004F

OS-0005F

SB-1601F

SB-2202F

SB-2201F

BB-0215F

BB-0415F

SPB-3811F

BB-0216F

SPB-3812F

BB-0417F

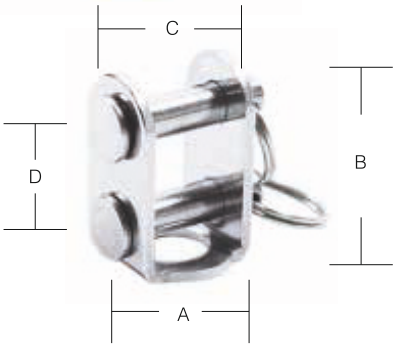

CB-1212F

CB-1214F

CB-1216F

Items	A	B	C	Pin1	Pin2	D
CB-1212F	9.4mm	23.5mm	11.7mm	ø5mm	ø5mm	7.1mm
CB-1214F	12.8mm	27.5mm	10.7mm	ø5mm	ø6.2mm	9.1mm
CB-1216F	15.5mm	39mm	18mm	ø8mm	ø8mm	13.3mm

*1 becket load should not exceed 30% of block load.
*2 Safe working and breaking load for Cam models based on Cam strength.

Item No.	Description	Sheave in	Sheave mm	Length in	Length mm	Weight oz	Weight g	Max line size in	Max line size mm	Safe working load lb	Safe working load kg	Breaking load lb	Breaking load kg
OS-0004F	Halyard Set(S)	5/8	16			2.82	80	1/4	6				
OS-0005F	Halyard Set(B)	5/8	16			1.62	46	1/4	6				
SB-1601F	Single	5/8	16	2/3	16	0.28	8	3/16	5	264	120	1212	550
SB-2202F	Signle/Becket	7/8	22	16/7	47	0.49	14	1/4	6	220	100	1212	550
SB-2201F	Signle	7/8	22	14	35	0.48	13	1/4	6	220	100	1212	550
BB-0215F	Single	11/8	29	2	49	0.60	17	5/16	8	220	100	1212	550
BB-0415F	Single	16/19	40	25/9	65	1.20	34	3/8	10	506	230	1760	800
SPB-3811F	Single	11/2	38	24/9	62	5.70	43	3/8	10	396	180	1980	900
BB-0216F	Lashing	11/8	29	13/4	44	0.53	15	5/16	8	352	160	1100	500
SPB-3812F	Single/Becket	11/2	38	32/5	86	1.80	51	3/8	10	396	180	1980	900
BB-0417F	Stand-up	16/19	40	22/3	67	1.52	43	3/8	10	506	230	1760	800
CB-1212F	Fork Becket					0.49	14						
CB-1214F	Fork Becket					0.78	22						
CB-1216F	Fork Becket					1.73	49						

Sheaves

Master has variety of sheaves in different sizes to meet sailors needs, Plain bearing sheaves come in 35mm, 50mm, 60mm, 72mm, and 90mm sizes. All materials are UV resistant and Anti-corrosion for durability.

Plain bearing Aluminum sheaves are hardcoat anodized Aluminum for static high loads.

Ball bearing composite sheave features self-lubricant acetal ball bearing to provide low-friction.

Ball bearing Aluminum sheaves are hardcoat anodized Aluminum for extremely high loads, UV-resistant, and Anti-corrosion for long-term use.

BP-3551F

BP-0551F

GE-27602F

BP-3552F

BP-0552F

BP-0652F

BB-0251F

BP-2251F

BB-3551F

BB-0451F

Item No.	Description	Sheave mm	holeØ mm	Weight g	Max line size in	Max line size mm
BP-3551F	35mm Composite	35	5	11	1/3	8
BP-0551F	50mm Composite	50	6.5	18	3/8	10
BP-0651F	60mm Composite	60	8	34	3/8	10
BP-7251F	72mm Composite	72	10	62	1/2	12
BP-0951F	90mm Composite	90	12	105	9/16	14
BP-3552F	20.6mm Composite	20.6	5	5	1/3	8
BP-0552F	28.8mm Composite	28.8	6.5	6.5	3/8	10
BP-0652F	34.5mm Composite	34.5	8	12	3/8	10
BP-7552F	48mm Composite	48	10	29	1/2	12
BP-0952F	60mm Composite	60	12	48	9/16	14

BP-0651F

BP-7251F

BP-0951F

BP-7552F

BP-0952F

GE-22602

GE-22606

SSC-0451F

SSC-5751F

SSC-7551F

SSC-7552F

Item No.	Description	Sheave mm	holeØ mm	Weight g	Max line size in	Max line size mm
GE-22602	50mm Aluminum	50	8	110	1/3	8
GE-22606	40mm Aluminum	50	16	32	1/4	6
GE-27602	50mm Aluminum	50	8	116	3/8	10
BB-0251F	29mm Composite	29	5	6	1/3	8
BB-2251F	22mm Composite	22	5	2.8	1/4	6
BB-3551F	35mm Composite	35	11.2	9.7	3/8	10
BB-0451F	40mm Composite	40	6.3	15.4	3/8	10
SSC-0451F	40mm Composite	40	12	17.7	1/2	12
SSC-5751F	57mm Composite	57	13	46	5/8	16
SSC-7551F	75mm Composite	75	19	88	3/4	19
SSC-7552F	45mm Composite	45	11.2	28.9	3/4	19

DE-3751F

DE-0551F

DE-5761F

DE-7561F

TS-5761F

HL-4561F

HL-0561F

HL-0761F

SB1651F

SPB-1671F

SPB-2971F

SPB-7652F

TC-2251F

Item No.	Description	Sheave mm	holeØ mm	Weight g	Max line size in	Max line size mm
DE-3751F	38mm Contained Sheave	37	6.4	13.5	3/8	10
DE-0551F	51mm Contained Sheave	51	6.6	34	5/8	16
DE-5761F	57mm Contained Aluminum Sheave	57	10	120.5	1/2	12
DE-7561F	76mm Contained Aluminum Sheave	76	10	192	5/8	16
TS-5761F	57mm Contained Aluminum Sheave	57	14.8	92.5	5/8	16
HL-4561F	45mm Contained Aluminum Sheave	45	14.5	44.5	1/2	12
HL-0561F	57mm Contained Aluminum Sheave	57	14.5	60	5/8	16
HL-0761F	76mm Contained Aluminum Sheave	76	20.6	116	3/4	19
SB-1651F	16mm Contained Sheave	16	4.9	3.6	1/5	5
SB-1671F	16mm 316L Stainless steel Sheave	16	4.9	8.6	1/5	5
SPB-2971F	29mm 316L Stainless steel Sheave	29	5	21.2	1/3	8
SPB-7652F	76mm Contained Sheave	50	17.7	33.8	1/2	12
TC-2251F	29mm Double Sheave Set	29	5	68	1/3	8

Cleats & kits

Cleats & Accessories

Master ball bearing cleat has a wide range for versatile use. Quick responsed open jaws secure lines fastly and release instantly. Jaws have all sizes available for different sizes of ropes.

Master Angle fairlead cleat kit allows cleats to trim and release from any angle. Stainless steel wire fairlead cleat kit allows wire loop to guide the line.

There are also many accessories for Master cleats allowing sailors for applications.

Strong Material

Cutting edge new lightweight composite cleat is made for racing where weight is critical. Available in Small and Medium sizes.

Aluminum cleat features black hardcoat anodized Aluminum base and jaws. The smooth surface improves the line engagement and release. The metal property helps cleats continuously trim and release for long-term use. Available in Small, Medium,and Large sizes.

Two-Race Ball Bearing

Two-race free running Derlin® ball bearing and constant tension spring provide quick responsed jaw opening and close.

Durability

All materials are UV resistant and Anti-Corrosion for maximum protection and long lasting durability.

Non Abrasion Jaws

Round jaw design can easily secure the line without shredding the rope.

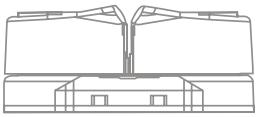

Aluminum

M4

27mm

BC-0611F

M5

38mm

BC-1201F

M6

52.2mm

BC-1601F

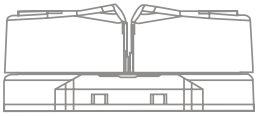

Composite

M4

BC-0601F

M5

BC-1001F

Produkt	Opis	Wysokość in	Wysokość mm	Waga oz	Waga g	Średnica liny in	Średnica liny mm	Obciążenie robocze lb	Obciążenie robocze kg	Obciążenie zrywające lb	Obciążenie zrywające kg
BC-0611F	Small Aluminum Cleat	7/8	22	1	30	1/8~1/4	3~6	220	100	440	200
BC-1201F	Medium Aluminum Cleat	11/16	27	2.4	68	1/8~1/2	3~12	330	150	660	300
BC-1601F	Large Aluminum Cleat	11/4	32	5.25	148	1/4~5/8	6~16	550	250	1100	500
BC-0601F	Small Composite Cleat	7/8	22	0.56	16	1/8~1/4	3~6	176	80	352	160
BC-1001F	Medium Composite Cleat	11/16	27	1.27	36	1/8~1/2	3~12	220	100	440	200

BC-0602F
BC-0612F

BC-1002F
BC-1202F

BC-0604F
BC-0614F

BC-1004F
BC-1204F

Produkt	Opis	Wysokość in	Wysokość mm	Waga oz	Waga g	Średnica liny in	Średnica liny mm	Obciążenie robocze lb	Obciążenie robocze kg	Obciążenie zrywające lb	Obciążenie zrywające kg
BC-0602F	Small Composite Cleat/Angle Fairlead	11/2	37	1.2	36	1/8~1/4	3~6	176	80	352	160
BC-0612F	Small Aluminum Cleat/Angle Fairlead	11/2	37	1.76	50	1/8~1/4	3~6	220	100	440	200
BC-1002F	Medium Composite Cleat/Angle Fairlead	13/4	45	2.43	69	1/8~1/2	3~12	220	100	440	200
BC-1202F	Medium Aluminum Cleat/Angle Fairlead	13/4	45	3.56	101	1/8~1/2	3~12	330	150	660	300
BC-0604F	Small Composite Cleat/Wire Fairlead	7/8	22	0.85	24	1/8~1/4	3~6	176	80	352	160
BC-0614F	Small Aluminum Cleat/Wire Fairlead	7/8	22	1.34	38	1/8~1/4	3~6	220	100	440	200
BC-1004F	Medium Composite Cleat/Wire Fairlead	11/16	27	1.78	50	1/8~1/2	3~12	220	100	440	200
BC-1204F	Medium Aluminum Cleat/Wire Fairlead	11/16	27	3.03	86	1/8~1/2	3~12	330	150	660	300

Do not use Master products to human suspension !

BC-0603F

BC-1003F

BC-06018

BC-10018

BC-0605F

BC-1005F

SB-16609

TC-22608

ALC-75601

Item No.	Description	Height in	Height mm	Weight oz	Weight g
BC-0603F	Small Angle Fairlead	15/8	42	0.28	8
BC-1003F	Medium Angle Fairlead	21/8	54	0.49	14
BC-06018	Small Top Fairlead (5 colors available)	9/16	14.2	0.16	4
BC-10018	Medium Top Fairlead (5 colors available)	5/7	18.3	0.32	9
BC-0605F	Small Stainless Steel Wire Fairlead	15/16	24.3	0.27	7
BC-1005F	Medium Stainless Steel Wire Fairlead	13/8	35.6	0.52	14
SB-16609	Small Saddle	3/8	10.9	0.09	2
TC-22608	Medium Saddle	3/4	18.5	0.44	12
ALC-75601	Large Saddle	11/8	27.5	1.06	30

BC-06104

CB-06002

BC-06005 / BC-10005

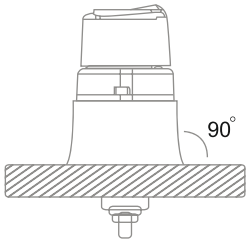

BC-06021

BC-10021

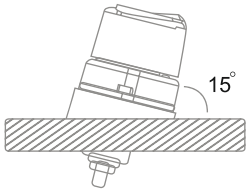

BC-06022

BC-10022

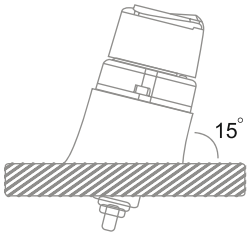

BC-06023

BC-10023

Item No.	Description	Height in	Height mm	Weight oz	Weight g
BC-06104	Smal & Medium Cleat Cap (5 colors available)	3/8	10	0.25	7
CB-06002	Bulls Eye	1 1/4	31.5	0.62	17
BC-06005	Small Cleat Bottom Pad	3/8	10.3	0.07	2
BC-10005	Medium Cleat Bottom Pad	5/9	13.9	0.14	4
BC-06021	Small Riser	5/8	16	0.62	17
BC-10021	Medium Riser	7/8	22.4	1.32	37
BC-06022	Small 15° Riser	2/7	7.2	0.26	7
BC-10022	Medium 15° Riser	3/8	9.8	0.55	15
BC-06023	Small 15° Angle Riser	3/4	8.6	0.64	18
BC-10023	Medium 15° Angle Riser	1	26	1.39	39

Swivel Bases

Master swivel bases allow sailors to rotate cam to face the line.

Swivel bases feature black hardcoat anodized Aluminum for maximum protection from UV and corrosion. Derlin® ball bearing provides smooth swirling even under static high loads. Based with stand-up spring and U adaptor to attach blocks

Both Composite and Aluminum cam cleats are available for purchase. All plate models are with 316L Stainless steel plates. Small swivel bases are perfect on main and jib sheets for small boats.

CB-1201F

CB-1201FE

CB-1202F

CB-1202FE

CB-0602F

CB-1003F

CB-1203F

CB-1002F

CB-1002FE

CB-1204F

CB-1204FE

Item No.	Description	Height in	Height mm	Weight oz	Weight g	Max line/wire size in	Max line/wire size mm	Safe working load lb	Safe working load kg	Breaking load lb	Breaking load kg
CB-1201F	Swivel Base/Fairlead Aluminum Cleat	7/8	22	11.99	340	1/8~3/8	3~12	330	150	660	300
CB-1201FE	Swivel Base/Angle Fairlead Aluminum Cleat	11/16	27	12.13	344	1/8~1/2	3~12	330	150	660	300
CB-1202F	Small Swivle Base/Fairlead Aluminum Cleat	11/4	32	11.46	329	1/8~3/8	3~12	330	150	600	300
CB-1202FE	Small Swivel Base/Angle Fairlead Aluminum Cleat	7/8	22	11.60	328	1/8~1/4	3~6	330	150	600	300
CB-0602F	Small Composite Cleat base/Bulls Eye	11/16	27	3.34	95	1/8~1/4	3~6	176	80	352	160
CB-1003F	Medium Composite Cleat base/Bulls Eye	7/8	22	3.54	100	1/8~3/8	3~12	220	100	440	200
CB-1203F	Medium Aluminum Cleat base/Bulls Eye	11/16	27	4.52	128	1/8~1/2	3~12	330	150	660	300
CB-1002F	Swivel Base/Fairlead Composite Cleat/Bulls Eye	11/4	32	6.77	192	1/8~3/8	3~12	220	100	440	200
CB-1002FE	Swivel Base/Angle Fairlead Composite Cleat/Bulls Eye	7/8	22	6.91	196	1/8~3/8	3~12	220	100	440	200
CB-1204F	Swivel Base/Fairlead Aluminum Cleat/Bulls Eye	11/16	27	7.76	220	1/8~3/8	3~12	330	150	660	300
CB-1204FE	Swivel Base/Angle Fairlead Aluminum Cleat/Bulls Eye	11/16	27	7.9	224	1/8~3/8	3~12	330	150	660	300

www.aquatech.fun

Lead Rings & Deck Fairleads

Master lead ring sizes from 8,10,14, 20 to 28mm holes. Lead ring provides a great solution where a ball bearing block is not required. They can be used for Jib leads, in-haulers, backstays, vangs, lazy jacks, and furling line leads. Master lead rings are lightweight black hardcoat anodized Aluminum for the best performance.

Master deck fairleads are made of black hardcoat anodized Aluminum loop for lightweight and durability. They are used to deflect sheets or control lines. Curve and smooth holes minimize line wear. Sizes are available in 12mm and 16mm.

LR-28

LR-08

LR-10

LR-14

LR-20

LR-122 M6
LR-162 M8

57.4mm
67.5mm

108.2mm
128.5mm

LR-124 M6
LR-164 M8

32mm
37mm

LR-121 M6
LR-161 M8

LR-123 M6
LR-163 M8

82.8mm
98mm

Item No.	Description	holeØ mm	Max LineØ mm	Weight g
LR-28	28mm Lead ring	28	28	120
LR-08	8mm Lead ring	8	8	2.6
LR-10	10mm Lead ring	10	10	6.2
LR-14	14mm Lead ring	14	14	13.2
LR-20	20mm Lead ring	20	20	42.5
LR-121	12mm Deck fairlead/Single	12	10	28.5
LR-161	16mm Deck fairlead/Single	16	14	48
LR-122	12mm Deck fairlead/Double	12	10	52.5
LR-162	16mm Deck fairlead/Double	16	14	89
LR-123	12mm Deck fairlead/Triple	12	10	75.3
LR-163	16mm Deck fairlead/Triple	16	14	126
LR-124	12mm Deck fairlead/Qaud	12	10	98.2
LR-164	16mm Deck fairlead/Qaud	16	14	165

Jib Fairleads

Master lightweight and strong jib fairlead deflects sheets to winches without override. They are made of black hardcoat anodized Aluminum against corrosion for durability. Smooth surface of the hole center keeps the rope free from wear.

LRG-22

LRG-12

Item No.	Description	holeØ mm	Height mm	Weight mm
LRG-12	Jib Fairlead	6.5	34.5	74
LRG-22	Jib Fairlead	10	54	264

Do not use Master products to human suspension !

Small & Midrange Deck Organizers

Master organizers feature saturated hardcoat anodized 6061-T6 Aluminum plates for maximum protection from UV and corrosion. Sheaves are running with contained Derlin® ball bearing for low friction. All sizes are stackable to double and triple configurations.

Small & Midrange boat organizers are ideal for Halyards, control lines, reef lines, outhauls, and pole lifts.

M5

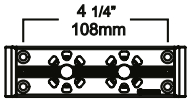

DE-3702F

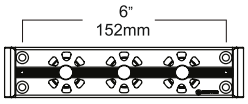

DE-3703F

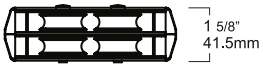

DE-3722F

DE-3723F

M6

DE-0502F

DE-0503F

DE-0522F

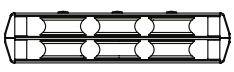

DE-0504F

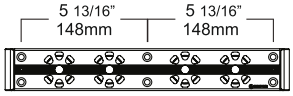

DE-0523F

DE-0505F

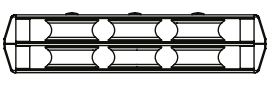

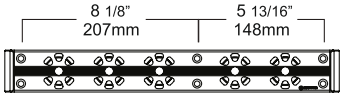

Item No.	Description	Sheave in	Sheave mm	Length in	Length mm	Weight oz	Weight g	Max line/wire size in	Max line/wire size mm	Safe working load lb	Safe working load kg	Breaking load lb	Breaking load kg
DE-3702F	Small Boat/2 sheaves	11/2	38	55/16	134	4.80	135	3/8	10	308	140	2090	950
DE-3703F	Small Boat/3 sheaves	11/2	38	7	178	6.40	182	3/8	10	308	140	2090	950
DE-3722F	Small Boat/Stacked/2 sheaves	11/2	38	55/16	134	8.00	225	3/8	10	308	140	2090	950
DE-3723F	Small Boat/Stacked/3 sheaves	11/2	38	7	178	10.8	305	3/8	10	308	140	2090	950
DE-0502F	Midrange Boat/2 sheaves	2	51	75/16	186	9.28	263	5/8	16	550	250	2530	1150
DE-0503F	Midrange Boat/3 sheaves	2	51	95/8	245	12.61	357	5/8	16	550	250	2530	1150
DE-0504F	Midrange Boat/4 sheaves	2	51	131/8	334	17.11	485	5/8	16	550	250	2530	1150
DE-0505F	Midrange Boat/5 sheaves	2	51	48	393	20.99	595	5/8	16	550	250	2530	1150
DE-0522F	Midrange Boat/Stacked/2 sheaves	2	51	75/16	393	16.08	456	5/8	16	550	250	2530	1150
DE-0523F	Midrange Boat/Stacked/3 sheaves	2	51	95/8	245	21.83	619	5/8	16	550	250	2530	1150

Hercules Deck Organizers

Master Hercules deck organizers are ideal for cruising boats. The sideplates are made of saturated black hardcoat anodized Aluminum for maximum protection and durability. Sheaves are replaceable with optional purchase for maintenance. Organizers come in different configurations from 2 sheaves to 6 sheaves.

SSC-0403F

SSC-5703F

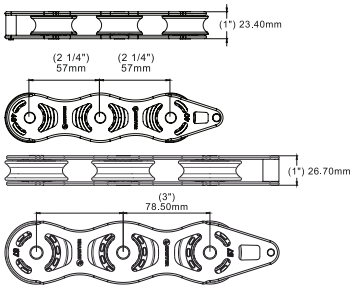

ALC-0402F M8

ALC-0502F M10

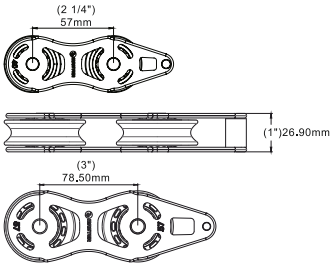

ALC-0405F

ALC-0505F

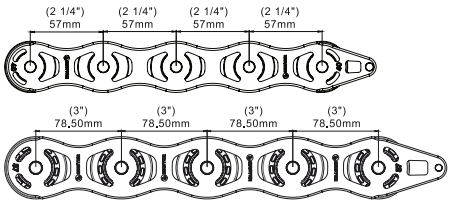

ALC-0403F

ALC-0503F

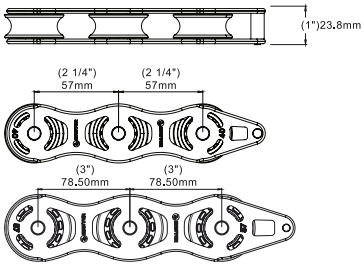

ALC-0406F

ALC-0506F

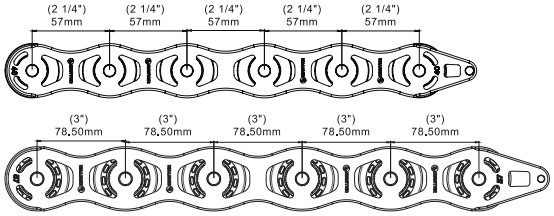

ALC-0404F

ALC-0504F

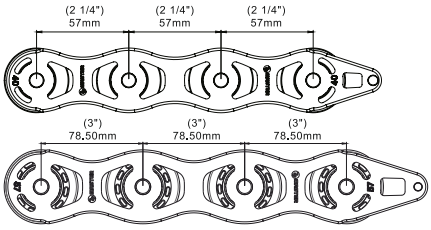

ALC-0523F

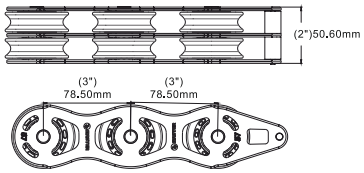

Item No.	Description	Sheave in	Sheave mm	Length in	Length mm	Weight oz	Weight g	Max line/wire size in	Max line/wire size mm	Safe working load lb	Safe working load kg	Breaking load lb	Breaking load kg
SSC-0403F	Stainless steel/3 sheaves	19/16	40	615/16	176	10.7	294	1/2	12	2200	1000	4400	2000
SSC-5703F	Stainless steel/3 sheaves	11/4	57	93/4	248	22.2	629	5/8	16	4400	2000	8800	4000
ALC-0402F	Aluminum/2 sheaves	19/16	40	411/16	119	3.8	108	1/2	12	2200	1000	4400	2000
ALC-0502F	Aluminum/2 sheaves	11/4	57	65/8	169	7.35	208	5/8	16	4400	2000	8800	4000
ALC-0403F	Aluminum/3 sheaves	19/16	40	615/16	176	5.70	162	1/2	12	2200	1000	4400	2000
ALC-0503F	Aluminum/3 sheaves	11/4	57	93/4	248	11.9	337	5/8	16	4400	2000	8800	4000
ALC-0404F	Aluminum/4 sheaves	19/16	40	93/16	233	7.70	218	1/2	12	2200	1000	4400	2000
ALC-0504F	Aluminum/4 sheaves	11/4	57	1213/16	326	15.6	442	5/8	16	4400	2000	8800	4000
ALC-0405F	Aluminum/5 sheaves	19/16	40	117/16	290	9.60	272	1/2	12	2200	1000	2530	1150
ALC-0505F	Aluminum/5 sheaves	11/4	57	1515/16	405	19.50	554	5/8	16	4400	2000	8800	4000
ALC-0406F	Aluminum/6 sheaves	19/16	40	1311/16	347	11.50	326	1/2	12	2200	1000	2530	1150
ALC-0506F	Aluminum/6 sheaves	11/4	57	19	482	23.50	667	5/8	16	4400	2000	8800	4000
ALC-0523F	Aluminum/Stacked/3 sheaves	11/4	57	89/16	218	20.40	577	5/8	16	4400	2000	2530	1150

Cruising Deck Organizers

Master's most fabulous deck organizers feature saturated black hardcoat anodized Aluminum sheave and Stainless steel bush with Derlin® ball bearing for good rotation and low friction. Side-plates are black hardcoat anodized Aluminum for maximum protection from UV and Corrosion.

DE-7603F

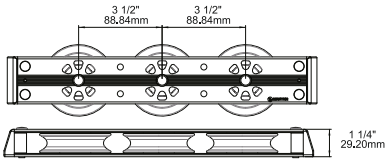

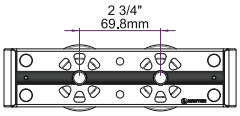

DE-5702F

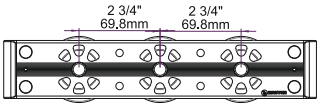

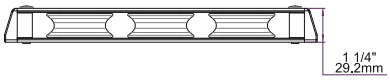

DE-5703F

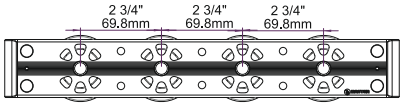

DE-5704F

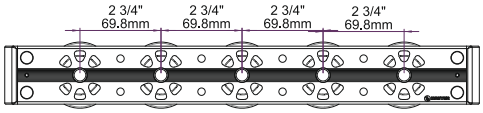

DE-5705F

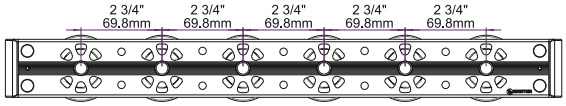

DE-5706F

Item No.	Description	Sheave in	Sheave mm	Length in	Length mm	Weight oz	Weight g	Max line/wire size in	Max line/wire size mm	Safe working load lb	Safe working load kg	Breaking load lb	Breaking load kg
DE-7603F	Aluminum/3 sheaves	3	76	13	330	39.9	1132	5/8	16	5940	2700	11880	5400
DE-5702F	Aluminum/2 sheaves	2 1/4	57	7 7/18	200	21.6	613	1/2	12	5060	2300	10120	4600
DE-5703F	Aluminum/3 sheaves	2 1/4	57	10 5/8	270	30.5	866	1/2	12	5060	2300	10120	4600
DE-5704F	Aluminum/4 sheaves	2 1/4	57	13 3/8	340	39.5	1119	1/2	12	5060	2300	10120	4600
DE-5705F	Aluminum/5 sheaves	2 1/4	57	16 1/8	409	48.6	1377	1/2	12	5060	2300	10120	4600
DE-5706F	Aluminum/6 sheaves	2 1/4	57	18 7/8	480	57.4	1628	1/2	12	5060	2300	10120	4600

Small & Midrange Traveler Car 22/27mm

Master traveler cars are one-piece solid CNC machined made. Surfaces are finished by saturated black hardcoat anodized Aluminum for maximum protection from UV and corrosion.

Two rows of captive Torlon® ball bearing run on precisely machined races for low friction. Small boat traveler car is perfect for dinghies, keelboats, beachcats, and offshore boats.

TC-2201F
TC-2201HL

TC-2202F
TC-2202HL

TC-2203F
TC-2203HL

TC-2205F
TC-2205HL

TC-2206F
TC-2206HL

TC-2204F
TC-2204HL

Item No.	Description	Width in	Width mm	Length in	Length mm	Weight oz	Weight g	Safe working load lb	Safe working load kg	Breaking load lb	Breaking load kg
TC-2201F	Pivoting shackle	2 1/2	63	2 15/16	75	5.38	152	550	250	2640	1200
TC-2201HL	Pivoting high load shackle	2 1/2	63	2 15/16	75	5.45	154	1100	500	2640	1200
TC-2202F	Pivoting Shackle/Toggle head	2 1/2	63	3 3/8	85	6.23	176	550	250	2640	1200
TC-2202HL	Pivoting high load shackle/Toggle head	2 1/2	63	3 3/8	85	6.30	178	1100	500	2640	1200
TC-2203F	Pivoting shackle	2 1/2	63	4 1/8	105	7.44	211	550	250	2640	1200
TC-2203HL	Pivoting high load shackle	2 1/2	63	4 1/8	105	7.51	213	1100	500	2640	1200
TC-2205F	Eyestrap/Single control sheave	2 1/2	63	4 1/8	105	8.25	234	550	250	2640	1200
TC-2205HL	Eyestrap/Single control sheave/High load	2 1/2	63	4 1/8	105	8.29	215	1100	500	2640	1200
TC-2206F	Eyestrap/Double control sheave	2 1/2	63	4 1/8	105	9.24	262	550	250	2640	1200
TC-2206HL	Eyestrap/Double control sheave/High load	2 1/2	63	4 1/8	105	9.28	263	1100	500	2640	1200
TC-2204F	Eyestrap/Single control sheave	2 1/2	63	2 15/16	75	5.94	168	550	250	2640	1200
TC-2204HL	Eyestrap/Single control sheave/High load	2 1/2	63	2 15/16	75	6.01	170	1100	500	2640	1200

TC-2208F
TC-2208HL

TC-2209HL

TC-2210HL

TC-2701F

TC-2702F

TC-2704F

TC-2703F

Item No.	Description	Width in	Width mm	Length in	Length mm	Weight oz	Weight g	Safe working load lb	Safe working load kg	Breaking load lb	Breaking load kg
TC-2208F	Eyestrap/Single control sheave/Cam	21/2	63	27/8	73	10.26	291	550	250	2640	1200
TC-2208HL	Eyestrap/Single control sheave/Cam/High load	21/2	63	27/8	73	10.35	293	1100	500	2640	1200
TC-2209HL	Pivoting eyestrap/Single control sheave/High load	21/2	63	41/8	105	10.72	304	1100	500	2640	1200
TC-2210HL	Pivoting eyestrap/Single control sheave/Swivel base/High load	21/2	63	41/8	105	7.44	211	1100	500	2640	1200
TC-2701F	Pivoting shackle	31/16	77	41/4	108	13.44	381	1980	900	3960	1800
TC-2702F	Pivoting shackle/Single control sheave	31/16	77	611/16	170	20.81	590	1980	900	3960	1800
TC-2703F	Pivoting shackle/High load	31/16	77	611/16	170	19.51	553	1980	900	3960	1800
TC-2704F	Pivoting shackle/Double control sheave	31/16	77	611/16	170	23	652	1980	900	3960	1800

Control End 22/27mm

Master control ends feature one-piece machined made saturated hardcoat anodized Aluminum providing ultimate lightweight and strong strength for static high loads.

These control ends work with Master blocks and cleats for small and midrange boat.

EC-2201F

EC-2211F

EC-2213F

EC-2203F

EC-2205F

TC-22002F

EC-2702F

EC-2704F

EC-2712F

EC-2714F

EC-2713F

EC-2705F

TC-27002F

Item No.	Description	Length in	Length mm	Width in	Width mm	Weight oz	Weight g	Safe working load lb	Safe working load kg	Breaking load lb	Breaking load kg
EC-2201F	Control end/Single sheave(pair)	39/16	90	215/16	75	5.41	153	330	150	660	300
EC-2211F	Control end/Double sheaves(pair)	39/16	90	215/16	75	6.16	174	330	150	660	300
EC-2203F	Control end/Single sheave/Small AL Cleat(pair)	39/16	90	33/8	85	7.64	216	220	100	440	200
EC-2213F	Control end/Double sheaves/Small AL Cleat(pair)	39/16	90	33/8	85	8.32	236	220	100	440	200
EC-2205F	Adjustable pinstop	111/16	42	41/8	105	2.45	69				
TC-22002	Track stop(pair)	115/16	50	41/8	105	0.76	21				
EC-2702F	Control end/Single sheave(pair)	37/8	98	41/8	105	9.84	279	396	180	792	360
EC-2704F	Control end/Single sheave/Deadend(pair)	37/8	98	41/8	105	10.14	287	396	180	792	360
EC-2712F	Control end/Double sheaves(pair)	37/8	98	41/8	105	11.55	327	396	180	792	360
EC-2714F	Control end/Double sheaves/Deadend(pair)	37/8	98	41/8	105	11.75	333	396	180	792	360
EC-2713F	Control end/Double sheaves/Aluminum Cleat(pair)	37/8	98	215/16	75	16.10	456	330	150	660	300
EC-2705F	Adjustable pinstop	21/8	54	215/16	75	5.45	154				
TC-27002	Track stop(pair)	2	51	215/16	75	0.90	25				

Genoa Cars 22/27mm

Master genoa car is one-piece CNC machine made. Surfaces are finished by saturated black hardcoat anodized Aluminum and all materials are UV resistant and Anti-corrosion. The NC machined sheave is for smooth rotation and long-term durability.

GE-2202SF

GE-2201F

GE-2701F

Item No.	Description	Length in	Length mm	Width in	Width mm	Weight oz	Weight g	Safe working load lb	Safe working load kg	Breaking load lb	Breaking load kg
GE-2202SF	22mm small genoa car/Pinstop	31/7	80	15/8	41	7.48	212	660	300	1320	600
GE-2201F	22mm genoa car/Pinstop	33/4	95	15/8	41	14.78	419	1320	600	2640	1200
GE-2701F	27mm genoa car/Pinstop	5	127	2	52	23.53	667	3080	1400	6160	2800

Do not use Master products to human suspension !

Tracks

All tracks are predrilled with holes for mounting fasteners. Pinstop model is available for both 22mm and 27mm Genoa lead cars.

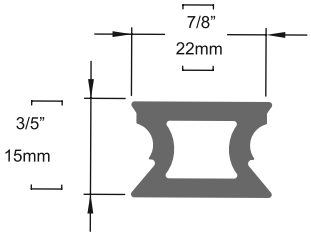

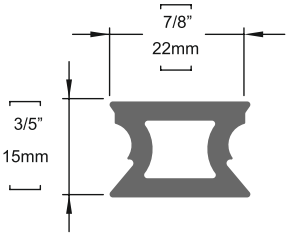

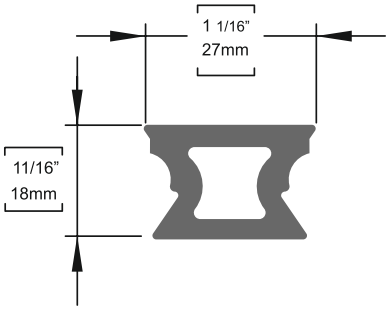

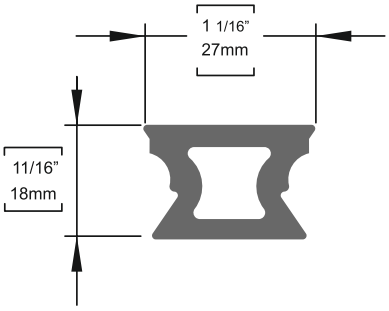

TC-22602DM-1m	**TC-22602G-1m**	**TC-27602DM-1m**	**TC-27602G-1m**
TC-22602DM-1.2m	**TC-22602G-1.2m**	**TC-27602DM-1.2m**	**TC-27602G-1.2m**
TC-22602DM-1.5m	**TC-22602G-1.5m**	**TC-27602DM-1.5m**	**TC-27602G-1.5m**
TC-22602DM-2m	**TC-22602G-2m**	**TC-27602DM-2m**	**TC-27602G-2m**

Item No.	Description	Length in	Length m	Hole SpacingØ in	Hole SpacingØ mm	Weight oz	Weight g	Fasteners mm
TC-22602DM-1M	1M Track	39 3/8	1.0	3 15/16	100	17.53	497	M5
TC-22602DM-1.2M	1.2M Track	47 1/4	1.2	3 15/16	100	21.03	596	M5
TC-22602DM-1.5M	1.5M Track	59	1.5	3 15/16	100	26.29	745	M5
TC-22602DM-2M	2M Track	78 3/4	2.0	3 15/16	100	35.05	994	M5
TC-22602G-1M	1M/Pinstop Track	39 3/8	1.0	3 1/8	80	17.28	490	M5
TC-22602G-1.2M	1.2M/Pinstop Track	47 1/4	1.2	3 1/8	80	20.75	588	M5
TC-22602G-1.5M	1.5M/Pinstop Track	59	1.5	3 1/8	80	18.78	532	M5
TC-22602G-2M	2M/Pinstop Track	78 3/4	2.0	3 1/8	80	34.55	980	M5
TC-27602DM-1M	1M Track	39 3/8	1.0	3 15/16	100	20.04	710	M8
TC-27602DM-1.2M	1.2M Track	47 1/4	1.2	3 15/16	100	30.04	852	M8
TC-27602DM-1.5M	1.5M Track	59	1.5	3 15/16	100	37.56	1065	M8
TC-27602DM-2M	2M Track	78 3/4	2.0	3 15/16	100	50.07	1420	M8
TC-27602G-1M	1M/Pinstop Track	39 3/8	1.0	3 1/8	80	24.68	700	M8
TC-27602G-1.2M	1.2M/Pinstop Track	47 1/4	1.2	3 1/8	80	29.62	840	M8
TC-27602G-1.5M	1.5M/Pinstop Track	59	1.5	3 1/8	80	37.02	1049	M8
TC-27602G-2M	2M/Pinstop Track	78 3/4	2.0	3 1/8	80	49.36	1399	M8

Clutch

Master XTC clutches are designed for easy engagement and quick release under static high loads. Inside mechanism is made of 316L Stainless steel and anodized Aluminum for long-term durability. Clutch body is exclusive composite with UV stabilizer for maximum protection.

XTC-04081F

XTC-04082F

XTC-04083F

XTC-04084F

XTC-08121F

XTC-08122F

XTC-08123F

XTC-08124F

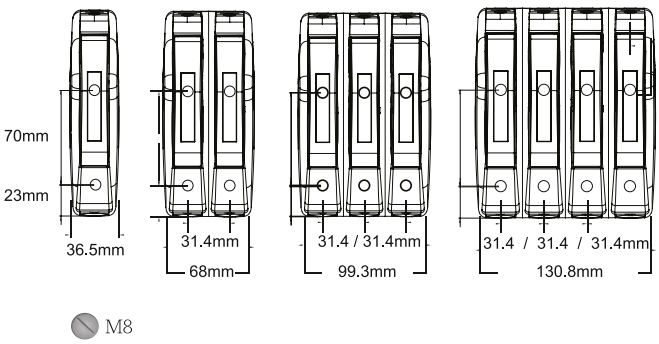

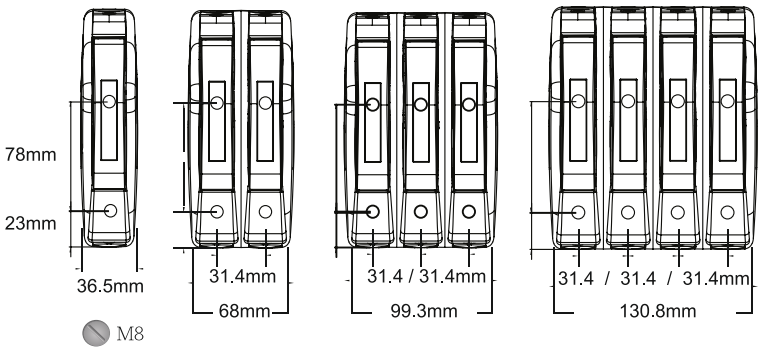

Item No.	Description	Weight oz	Weight g	Max line/wire size in	Max line/wire size mm	Safe working load lb	Safe working load kg	Maximum load lb	Maximum load kg
XTC-04081F	Single Clutch	15.2	430	1/8~3/8	4~8	396	180	1100	500
XTC-04082F	Double Clutch	28.8	815	1/8~3/8	4~8	396	180	1100	500
XTC-04083F	Triple Clutch	42.3	1200	1/8~3/8	4~8	396	180	1100	500
XTC-04084F	Quad Clutch	55.9	1585	1/8~3/8	4~8	396	180	1100	500
XTC-08121F	Single Clutch	15.2	430	3/8~9/16	8~14	660	300	1320	600
XTC-08122F	Double Clutch	28.8	815	3/8~9/16	8~14	660	300	1320	600
XTC-08123F	Triple Clutch	42.3	1200	3/8~9/16	8~14	660	300	1320	600
XTC-08124F	Quad Clutch	55.9	1585	3/8~9/16	8~14	660	300	1320	600

Tiller Extension

With a wide range from Carbon Fiber to Aluminum alloy, Master tiller extensions provide an excellent steering feeling for quick and precise response in ultimate sailing conditions.

Master tiller extension features non-slip, waterproof, and UV resistant Hypalon® grip for the best steering feeling.

Carbon fiber stick is engineered for maximum strength and minimum weight. Sticks are able to reach optimum stiffness with highly condensed carbon fiber to meet ultimate sailing conditions.

Universal joint is made of excellent weather resistant material, more durable than normal rubbers.Tool-free design is easy to install, remove, and exchange.

Retaining clip can hold tiller extension when not use.

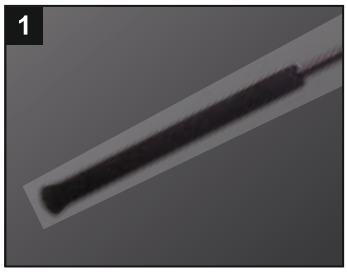

The unique Hypalon Grip

Universal joint rotates 360°

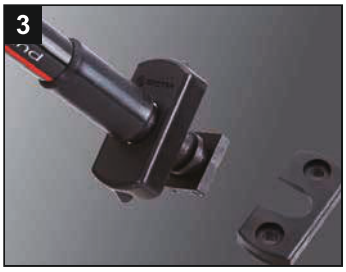

Base cover snaps off to remove tiller extension

TE-16016 16mm
Retaining Clip

TE-16020 20mm
Retaining Clip

TEC-1001
Universal joint

TEA-1001 TEA-1004
TEA-1002 TEA-1005
TEA-1003 TEA-1006

TEC-1002 TEC-1005
TEC-1003 TEC-1006
TEC-1004 TEC-1007

Item No.	Description	Length in	Length mm	Tubeo in	Tubeo mm	Weight oz	Weight g	Fasten in	Fasten mm
TEA-1001	60cm Aluminum Tiller Extension	24	600	5/8	16	7.48	212	3/16	5
TEA-1002	76cm Aluminum Tiller Extension	30	760	5/8	16	8.50	241	3/16	5
TEA-1003	84cm Aluminum Tiller Extension	33	840	5/8	16	8.80	249	3/16	5
TEA-1004	91cm Aluminum Tiller Extension	36	910	5/8	16	9.51	269	3/16	5
TEA-1005	107cm Aluminum Tiller Extension	42	1070	5/8	16	10.50	297	3/16	5
TEA-1006	122cm Aluminum Tiller Extension	48	1220	5/8	16	11.33	321	3/16	5
TEC-1002	60cm Carbon Fiber Tiller Extension	24	600	5/8	16	6.39	181	3/16	5
TEC-1003	76cm Carbon Fiber Tiller Extension	30	760	5/8	16	6.95	197	3/16	5
TEC-1004	84cm Carbon Fiber Tiller Extension	33	840	5/8	16	7.30	207	3/16	5
TEC-1005	91cm Carbon Fiber Tiller Extension	36	910	5/8	16	7.71	218	3/16	5
TEC-1006	107cm Carbon Fiber Tiller Extension	42	1070	5/8	16	8.33	236	3/16	5
TEC-1007	122cm Carbon Fiber Tiller Extension	48	1220	5/8	16	8.86	251	3/16	5

Pushing to the limit always Keeps you ahead of wind.

More than 5 years, Master continues to push the limit of design, functionality, and innovation to always keep you ahead of wind. No matter which Master block you choose, they all have high-quality and outstanding performance.

www.aquatech.fun

MASTER
ahead of wind

AQUATECH
.FUN

TEL.+48602713504, WWW.AQUATECH.FUN